1. (306351) GRAISSAGE AUTOMATIQUE DES VIS A BILLES X3 ET X4

Utilisation d'un système de graissage centralisé sur les vis à billes des axes X3 / X4 pour les machines DECO 20 et DECO 26.

CARACTERISTIQUES GENERALES		
Eléments	**Description**	**Caractéristiques**
Motopompe	BIJUR AD–L	115V/220V
Réservoir		2,5l
Doseur volumétrique		25mm³/cycle
Volume d'huile	par point	150mm³/heure
Nombre d'impuisions		6 impuls. / heure
Consommation	2 points X3 et X4	350mm³/heure
Autonomie du réservoir		7000 heures

La pompe est livrée pré–programmée.

⇒ La description du fonctionnement ainsi que la description de la motopompe se trouve dans le mode d'emploi du fournisseur accompagnant le matériel.

Huile de graissage:

⚠ Mise en garde ! Utiliser uniquement de l'huile de graissage ISO VG320, par exemple celle de MOTOREX : COREX HLP 320

1.1 DISPOSITIF DE SECURITE

Les alarmes du **niveau d'huile** dans le réservoir et de la **pression d'huile** sont signalées par la lampe témoin située sur le côté gauche de la machine.

307

Lampe allumée = Défaut = (1) Niveau d'huile
= (2) Pression trop basse.

Pour intervenir sur la motopompe, enlever la tôle de protection arrière de la machine.

Voyant sur motopompe
– voyant vert clignotant => niveau intermédiaire = alarme passive
– voyant vert fixe allumé => niveau trop bas, passe en alarme
– voyant passe au rouge => Défaut motopompe

1. (306351) AUTOMATISCHE SCHMIERUNG DER KUGELUMLAUFSPINDELN X3 UND X4

Einsatz eines Zentralschmiersystems für die Kugelumlaufspindeln der Achsen X3 / X4 auf den Maschinen DECO 20 und DECO 26.

ALLGEMEINE TECHNISCHE DATEN		
Bestandteile	**Bezeichnung**	**Technische Daten**
Motorpumpe	BIJUR AD–L	115V/220V
Behälter		2,5l
Dosierelement		25mm³/Schmiertakt
Ölmenge	pro Schmierpunkt	150mm³/h
Anzahl Schmiertakte		6 Impulse / h
Ölverbrauch	2 Punkte X3 und X4	350mm³/h
Behälterautonomie		7000 Stunden

Die Pumpe wird vorprogrammiert geliefert

⇒ Die Beschreibung der Arbeitsweise sowie die technische Beschreibung der Motorpumpe sind in der beiliegenden, vom Lieferanten beigestellten Gebrauchsanweisung enthalten.

⚠ Vorsicht ! Ausschließlich Schmieröl gemäß ISO VG320 verwenden, z.B. Marke Motorex : COREX HLP 320

1.1 SICHERHEITSSYSTEM

Die Störungsanzeigen **Ölstand** im Behälter und **Öldruck** werden durch die Leuchtdiode an der Maschinenseite gemeldet.

307

Leuchtdiode leuchtet = Fehler = (1) Ölfüllstand
= (2) Druck zu tief.

Zum Eingreifen auf der Motorpumpe, die Blechverkleidung der Maschinenhinterseite entfernen.

Leuchtdiode auf Motorpumpe

– Diode blinkt grün => mittlere Füllstand = passive Störanzeige
– Diode leuchtet grün => Füllstand zu tief, tritt in Störanzeige über
– Diode leuchtet rot => Fehler Motorpumpe

1. (306351) CENTRALIZED LUBRICATION OF THE BALL SCREWS OF THE AXES X3 AND X4

Use of a centralized lubrication system for the ball screws of the axes X3 / X4 on the machines DECO 20 and DECO 26.

GENERAL TECHNICAL DATA		
Elements	**Description**	**Technical Data**
Motor pump	BIJUR AD–L	115V/220V
Reservoir		2,5l
Volumetric dosing element		25mm^3/cycle
Oil volume	per point	150mm^3/hour
Number of pulses		6 pulses / hour
Consumption	2 points X3 and X4	350mm^3/hour
Operating autonomy of the reservoir		7000 hours

The pump is programmed by the supplier when delivered

⇒ The descriptions of the operation of the motor pump and the motor pump itself are given in the instruction manual which is delivered by the supplier together with the material.

Lubrication oil:

⚠ **Caution !** Use only **lubrication oil ISO VG320**, for example of brand MOTOREX : TYPE COREX HLP 320

1.1 SAFETY DEVICE

Oil level and **oil pressure** in the tank alarms are indicated by a control light which is located at the left side of the machine.

307

The light is lighted = Fault = (1) Oil level
= (2) To low pressure.

To intervene on the pump, take off the sheet metal guard at the rear of the machine.

Control light on the motor pump

– Blinking green light => middle level = passive alarm
– Permanent green light => to low oil level, the pump makes an alarm
– Light becomes red => failure of the motor pump

1. (306351) LUBRIFICAZIONE AUTOMATICA DELLE VITI A SFERE X3 E X4

Utilizzo di un sistema centralizzato di lubrificazione sulle viti a sfere degli assi X3 / X4 per le macchine DECO 20 e DECO 26.

CARATTERISTICHE GENERALI		
Elementi	**Descrizione**	**Caratteristiche**
Motopompa	BIJUR AD–L	115V/220V
Serbatoio		2,5l
Dosatore volumetrico		25mm^3/ciclo
Volume d'olio	per punto	150mm^3/ora
Numero d'impulsi		6 impulsi / ora
Consumo	2 punti X3 e X4	350mm^3 / ora
Autonomia del serbatoio		7000 ore

La pompa viene consegnata pre–programmata.

⇒ La descrizione del funzionamento così come la descrizione della motopompa si trovano nelle istruzioni d'uso del fornitore che accompagnano il materiale.

Olio di lubrificazione:

⚠ **Cautela!** Usare solo olio lubrificante ISO VG320, ad esempio quello della MOTOREX: COREX HLP 320.

1.1 DISPOSITIVO DI SICUREZZA

Gli allarmi del **livello olio** nel serbatoio e della **pressione olio** sono segnalati dalla spia presente sul lato sinistro della macchina.

307

Spia accesa = Guasto = **(1)** Livello dell'olio
= **(2)** Pressione troppo bassa.

Per intervenire sulla motopompa, togliere la lastra di protezione dietro la macchina.

Spia su motopompa
– spia verde intermittente => livello intermedio = allarme passivo
– spia verde fissa => livello troppo basso, passa in allarme
– spia che passa al rosso => guasto motopompa

1. (306351) LUBRICACIÓN AUTOMÁTICA DE LOS TORNILLOS DE BOLAS X3 Y X4

Utilización de un sistema centralizado de lubricación en los tornillos de bolas de los ejes X3 / X4 para las máquinas DECO 20 y DECO 26.

CARACTERÍSTICAS GENERALES		
Elementos	**Descripción**	**Características**
Motobomba	BIJUR AD–L	115V/220V
Depósito		2.5l
Dosificador volumétrico		25 mm^3/ciclo
Volumen de aceite	por punto	150 mm^3/hora
Número de impulsos		6 impuls. / hora
Consumo	2 puntos X3 y X4	350 mm^3/hora
Autonomía del depósito		7000 horas

La bomba es entregada ya preprogramada.

⇒ La descripción del funcionamiento, así como la descripción de la motobomba, se encuentran en las instrucciones del proveedor que acompañan al material.

Aceite de lubricación:

Δ ¡Aviso! Utilizar sólo aceite de lubricación ISO VG320, por ejemplo él de MOTOREX : COREX HLP 320

1.1 DISPOSITIVO DE SEGURIDAD

Las alarmas del **nivel del aceite** en el depósito y de la **presión del aceite** vienen indicadas por la lámpara chivato situado en el lado izquierdo de la máquina.

307

Lámpara encendida = Avería = (1) Nivel aceite
= (2) Presión demasiado baja.

Para intervenir en la motobomba, quitar la plancha protectora trasera de la máquina.

Chivato en la motobomba
– chivato verde intermitente => nivel intermedio = alarma pasiva
– chivato verde encendido fijo => nivel demasiado bajo, pasa en alarma
– chivato pasa al rojo => Avería motobomba

SAFETY REGULATIONS

TORNOS BECHLER

DECO 2000
300480 E

▲ **ATTENTION !** Before handling the machine, read first these regulations.

© 2000 Printed in Switzerland

TORNOS–BECHLER S.A.
CH–2740 MOUTIER / Suisse
Internet: http://www.tornos.ch

TORNOS BECHLER

TABLE OF CONTENTS

1.	**INTRODUCTION**	**1**
2.	**GENERAL RULES FOR ALL USERS**	**2**
3.	**OPERATING INSTRUCTIONS AND NOTICES**	**3**
4.	**ORDER – CLEANLINESS – MAINTENANCE**	**3**
5.	**SAFETY MEASURES AND DEVICES**	**3**
5.1	PROTECTIVE GUARDS FOR PERSONS	3
5.1.1	Inspection of Protective Guards	3
5.1.2	Items indicated for DECO 7/10 mm	4
5.1.3	Items indicated for DECO 13 mm	5
5.1.4	Items indicated for DECO 20 et 26 mm	6
5.2	MAIN SWITCH	7
5.3	ELECTRIC CABINET OR LIVE ELEMENTS	7
5.4	EMERGENCY STOB AND CONTROL PANEL	8
5.4.1	Control panel DECO 7/10 mm	8
5.4.2	Control panel DECO 13, 20 et 26 mm	9
5.4.3	Emergency Stop	10
6.	**WHAT TO DO BEFORE ANY REPAIRS OR SERVICE**	**11**
7.	**SETTING MODE**	**12**
8.	**FIRE PREVENTION**	**13**

TORNOS BECHLER

SAFETY REGULATIONS
FOR DECO 2000 7/10mm, 13mm, 20mm, 26 mm

1. INTRODUCTION

All machine users such as :

- owners,
- managers, operators, setters, programmers, foremen, mechanics,
- installators, maintenance and service staff or any other person in related function,

must read and strictly follow the safety regulations in this document.

These regulations also pertain to options, components, installations, attachments and systems related to the machine.

▲ Warning ! FAILURE TO COMPLY WITH THESE REGULATIONS MAY CAUSE SERIOUS ACCIDENTS.

TORNOS BECHLER

3. OPERATING INSTRUCTIONS AND NOTICES

- Operating instructions and notices, delivered by the manufacturer with the machine or at a later date, must be brought to the knowledge of all persons working on the machine or in whatever manner responsible for it.
- These persons must read the instructions and follow them strictly.
- The instructions must be regularly updated and kept in a clean place. Anybody likely to work on the machine must have a ready access to the instructions.

4. ORDER – CLEANLINESS – MAINTENANCE

▲ Warning ! Order and cleanliness around the machine are important measures for the safety. Slipping is dangerous and can entail injuries.

- Clean regularly the floor around the machine.
- Remove stains of grease, oil etc.
- Do not leave tools or other items to lie around on the shop floor or any workplace.
- Antislip covering of the shop floor is recommended.
- Clean regularly the machine inside.
- Maintain regularly all elements of the machine according to manufacturer's instructions for accident-free operation

5. SAFETY MEASURES AND DEVICES

5.1 PROTECTIVE GUARDS FOR PERSONS

▲ Danger ! The machine must not work with doors and protective guards open. Before each shuttling on or startup of the machine, make sure that all doors, access panels and other sliding or removable guards are properly closed.

☐ **Info :** Check regularly the safety devices !
A qualified and specially designated person must inspect periodically all safety measures and devices against the manufacturer's documentation.

5.1.1 Inspection of Protective Guards

- The guards must be complete and in good condition.
- The guards and their safety devices must be clean.
- The machine with a sliding guard open must not start.

TORNOS BECHLER

5.1.3 Items indicated for DECO 13 mm

1010 See-through guard for machining zone

1020 See-through guard for headstock zone

1030 LH side access panel

1040 Back access panel

1050 RH side acess panel

1060 Control panel

QS0 Main switch

C Padlock

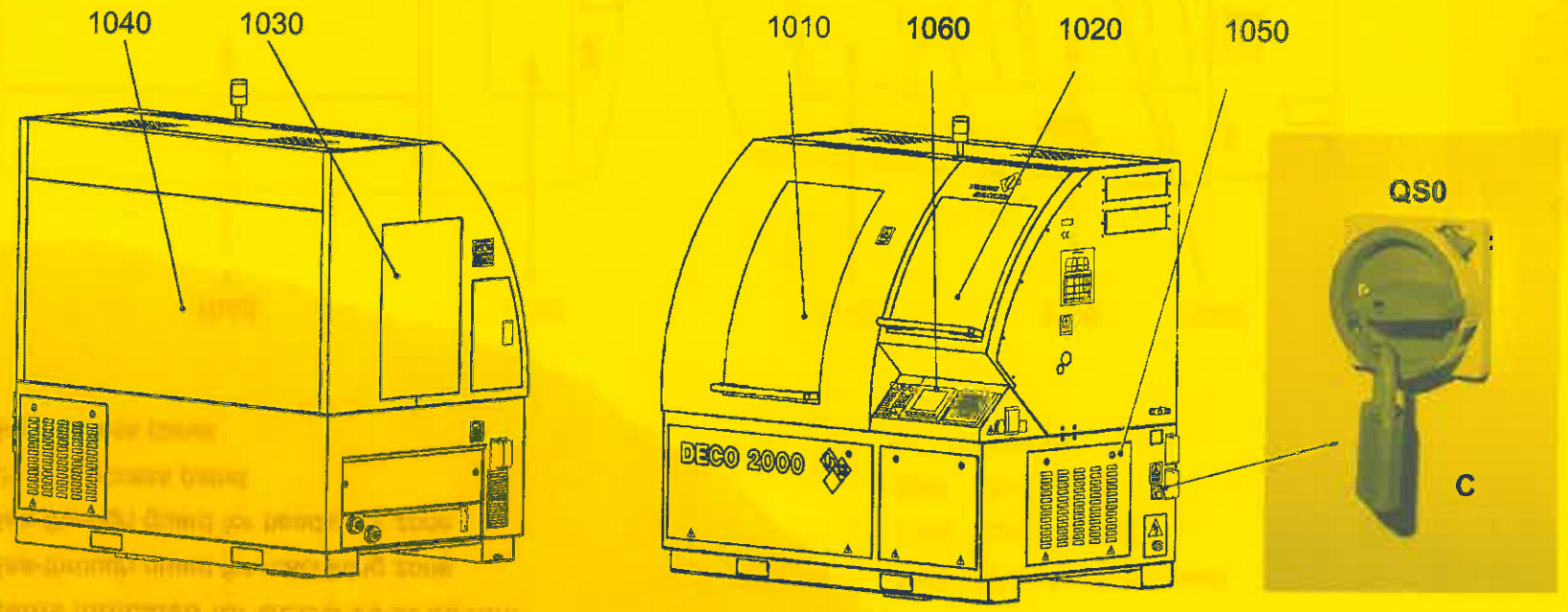

fig. 2

TORNOS BECHLER

5.2 MAIN SWITCH

▲ **Danger !** Before repairs, maintenance works or any other activity inside the machine, turn Main Switch **QS0** off and lock it with Padlock(s) **1** (see Fig. 1, 2 or 3).

TURNING OFF AND LOCKING THE MAIN SWITCH	
What to do ?	**How & Notes**
• Set the **main switch** on 0 to turn it off.	See Fig. 1, 2 or 3.
• Fit Padlock(s) **C in** the opening(s) provided for this purpose:	according to local regulations. ☐ **For DECO 7/10, 20 et 26 mm:** ▲ **Warning !** Following the EMC standards, Filter **Z1** is live because it is located before Main Switch **QS0**.

5.3 ELECTRIC CABINET OR LIVE ELEMENTS

▲ **Danger !** Only a qualified person is authorized to intervene inside the electric cabinets or on an electric element.

- Turn off and lock the main switch (for details, see below).
- Follow the electric regulations at all times.

Should the electric regulations be disregarded Tornos–Bechler declines any liability for the damages.

TORNOS BECHLER

5.4.2 Control panel DECO 13, 20 et 26 mm

Items indicated :

SB1 Emergency stop pushbutton

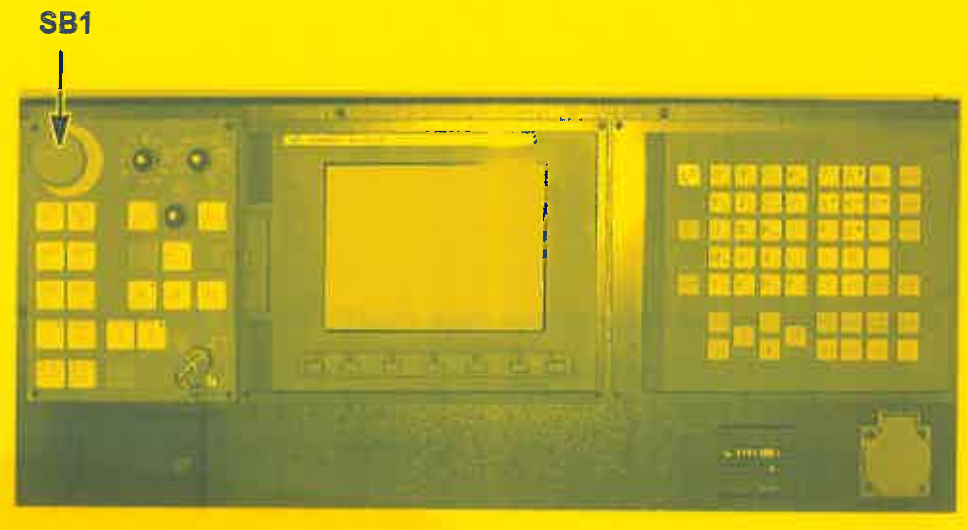

fig.5

Control panel

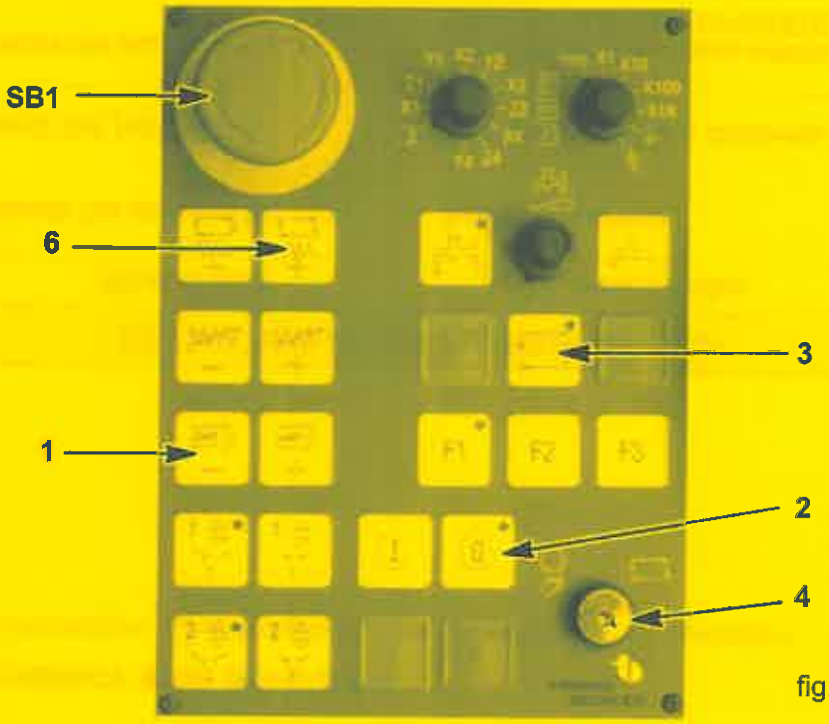

fig.6

TORNOS BECHLER

6. WHAT TO DO BEFORE ANY REPAIRS OR SERVICE

▲ Danger !
- **Stop and switch off the machine before any intervention !**
- Do not turn off Main Switch **QS0** if the maintenance works require electric power.
- Only qualified and trained staff is authorized to take action on the machine with the main switch engaged ! Main Switch, see Fig. 1, 2 or 3.

• 2 cases are possible :

1. WHEN MACHINE IS RUNNING	
What to do ?	**How & Notes**
To stop the machine as programmed, press Button **3**	See Operator Panel in fig. 4 or 6.

2. WHEN MACHINE IS IN STANDSTILL	
☐ Some works require a particular position of a mobile element of the machine.	
Check if all axes are in reference position.	▲ **Caution !** Effect the movement in manual mode only. ☐ For details, see Instructions: USER INTERFACE OPERATION and INSTALLATION, OPERATION, MAINTENANCE.

CUTTING OFF ALL POWER SOURCES	The machine must be in a complete standstill.
Press Button **1 to stop the main motor.** Press Button **2 to disengage axis power.**	See Control Panel in Fig. 4 or 6
Turn off Main Switch QS0 on the electric cabinet and **lock it with Padlock C.**	On the side of the machine, see fig. 1, 2 or 3.

TORNOS BECHLER

8. FIRE PREVENTION

- Keep any form of fire at least 1 meter from the machine. (including sparks and cigarettes).
- Carry out daily maintenance according to instructions.
- The machine must work within the scope for which it has been conceived.
- It is advisable to use a room of the workshop to equip it with a fire alarm system.

RISKS DUE TO INFLAMMABLE OR EXPLOSIVE MATERIAL

▲ **Warning !** If the machine works with pyrophoric elements, it must be fitted with a fire monitoring device and a fire control equipment. When in doubt, please contact Tornos–Bechler.

DAILY FIRE PREVENTION

▲ **Caution !** Carry out the following instructions :

- Make sure that tools cut correctly (wear) and are not obstructed by chips. Pay attention to excessive noise and vibrations.
- Maintain constantly coolant level.
- Make sure that coolant is distributed correctly and sufficiently and that distribution openings are not obstructed. Clean the suction filter.
- Make sure that chip tank and oil tank do not contain too many chips.
- Make sure that the guards are correctly closed and that no oil leaks out.

FIRE PREVENTION FOR SMOKE OR OIL MIST

- Do not use any worn tool.
  A worn tool generates friction between tool and workpiece, which causes excessive warming.
- Remove the chips which obstruct the work area.
  Accumulation of chips reduces the efficiency of the cutting liquid (coolant).
- Remove immediately any long chip. It can dislocate the nozzles !
- Use a cutting liquid recommended by the supplier.
  Fire risks increase strongly if you use inflammable cutting liquids or if coolant flow is too low.
- Maintain ambient temperature in your workshop.
  If it is too hot, cutting liquid may evaporate.

☐ **Info :** Respond rapidly if you state any of the following :

- Vapor and mist spread in your workshop.
- Cutting action or an electric element produces sparks.

INSTALLATION
OPERATION
MAINTENANCE

DECO 2000

20mm-CAPACITY

TORNOS BECHLER

ATTENTION !

Before handling the machine, read first the information contained in the leaflet, entitled "SAFETY REGULATIONS"

TORNOS-BECHLER S.A.
CH-2740 MOUTIER / Suisse
Internet: http://www.tornos.ch

Printed in Switzerland

TABLE OF CONTENTS

1.	**PACKING - TRANSPORT - INSTALLATION**	**1**
1.1	INTEGRAL GUARD AND PANELLING (306026)	1
1.2	UNPACKING AND CLEANING THE MACHINE	3
1.3	TRANSPORT	5
1.4	INSTALLATION	5
1.4.1	FLOOR PREPARATION	5
1.5	LIFTING THE MACHINE	7
1.6	ELECTRIC INSTALLATION	9
1.6.1	INSTALLATION CHARACTERISTICS	9
1.6.2	ELECTRIC CONNECTION	9
1.6.3	CONNECTING TORNOS-BECHLER AUTOTRANSFORMER	10
1.6.4	CONNECTING NON-TORNOS-BECHLER AUTOTRANSFORMER	11
1.6.5	CONNECTING BARFEEDER AND CHIP CONVEYOR	11
1.7	PNEUMATICS INSTALLATION	12
1.7.1	AIR QUALITY SPECIFICATION	12
2.	**MAINTENANCE, EQUIPMENT & MISCELLANEOUS**	**1**
2.1	MANUAL LUBRICATION	1
2.1.1	SUBSTITUTE LUBRICANTS CHART	1
2.1.2	GREASE PUMP (305042)	2
2.1.3	MAINTENANCE SCHEDULE	3
2.2	MAINTENANCE AND OTHER KNOW-HOW	5
2.2.1	MANUAL GREASING OF ROLLERGUIDES AND BALLSCREWS	5
2.2.2	MANUAL GREASING OF PINION OR BEVEL GEARS	5
2.2.3	CHECKING TIMING BELT TENSION	5
2.2.4	TENSIONING TIMING BELTS	6
2.2.5	GUIDEBUSH LAPPING	7
2.2.6	OIL GUN (306050)	8
2.2.7	CHANGING AIR FILTERS	11
2.2.8	CHANGING RELAYS IN ELECTRIC CABINET	11
2.2.9	CHANGING BATTERIES	11
2.3	STANDARD REPAIR	12
2.4	COOLANT SYSTEM AND CUTTING FLUID	13
2.4.1	REFILLING COOLANT	13
2.4.2	FLUSH COOLANT PUMP STRAINER	13
2.4.3	FLUSH COOLANT FLOW SENSOR	13

5.3 PART DISPOSAL MANIPULATOR (306017) 11
5.3.1 MANIPULATOR OPERATION DIAGRAM 16
5.3.2 MANIPULATOR PNEUMATICS (306018) 17

6. PNEUMATICS & COOLANT 1

6.1 STANDARD PNEUMATICS (306021) 1
6.2 COOLANT PUMP (306023) 5
6.3 STANDARD COOLANT SYSTEM (306024) 6
6.4 ADDITIONAL PNEUMATICS & COOLANT 8
6.4.1 PICKOFF SPINDLE PNEUMATICS (306022) 8
6.4.2 COOLANT SYSTEM FOR S4-SPINDLE (306052) 8
6.4.3 COOLANT SYSTEM FOR BACKWORK GANG (306053) 8

7. MACHINE EQUIPMENT 1

7.1 CHIP PAN (306034) 1
7.2 OIL TANK (306025) 2
7.3 PARTS CONTAINER (305038) 3

8. TOOLING FOR X1-Y1 & X2-Y2 GANGS 1

8.1 LEFT / RIGHT TOOLHOLDER (306033) 1
8.2 HIGH TOOLHOLDER (306061) 4

9. OPTIONAL GUIDEBUSHES 1

9.1 FIXED GUIDEBUSH (306043) 1
9.2 GUIDEBUSH COOLANT SYSTEM (306057) 4
9.3 LIVE GUIDEBUSH (306028) 6
9.4 LIVE GUIDEBUSH DRIVE (306027) 9

10. TOOLING & EQUIPMENT FOR BACKWORK UNIT 1

10.1 STATIONARY 25MM-ID TOOLHOLDER (306040) 1
10.2 BASEPLATE FOR BACKWORK GANG (306019) 4

1. PACKING - TRANSPORT - INSTALLATION

1.1 INTEGRAL GUARD AND PANELLING (306026)

Components :

1010 See-through hatch for machining zone

1020 See-through hatch for headstock zone

1030 Left access panel

1040 Back access panel

1050 Right access panel

1060 Controls

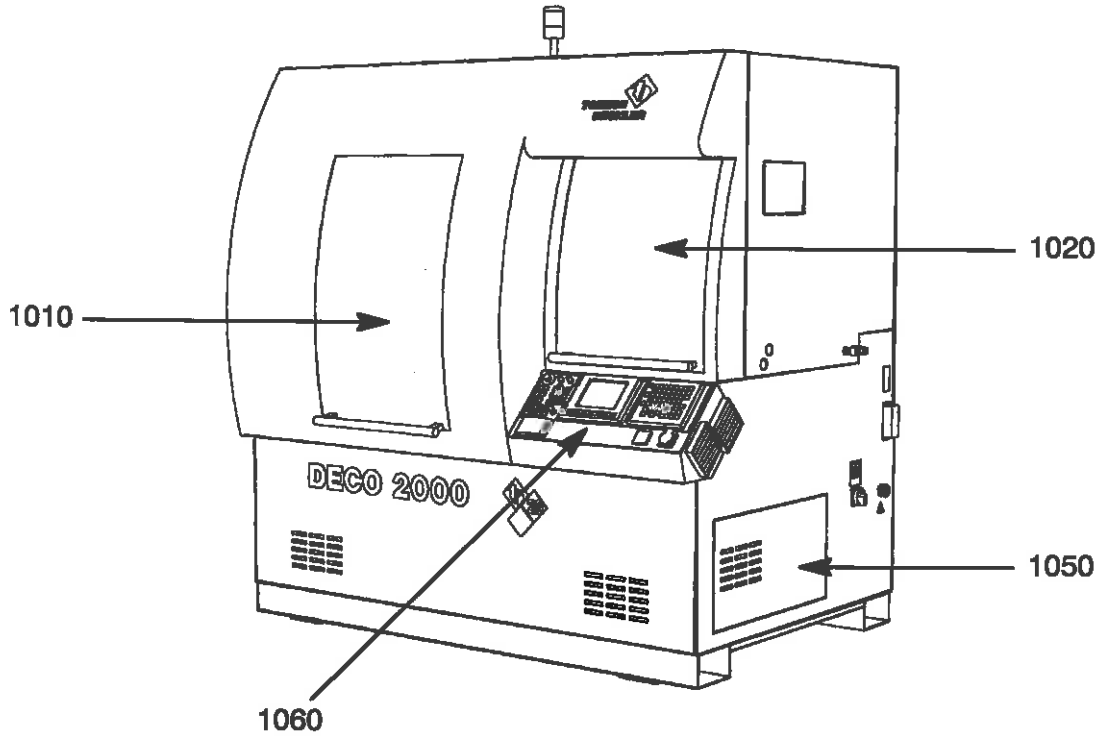

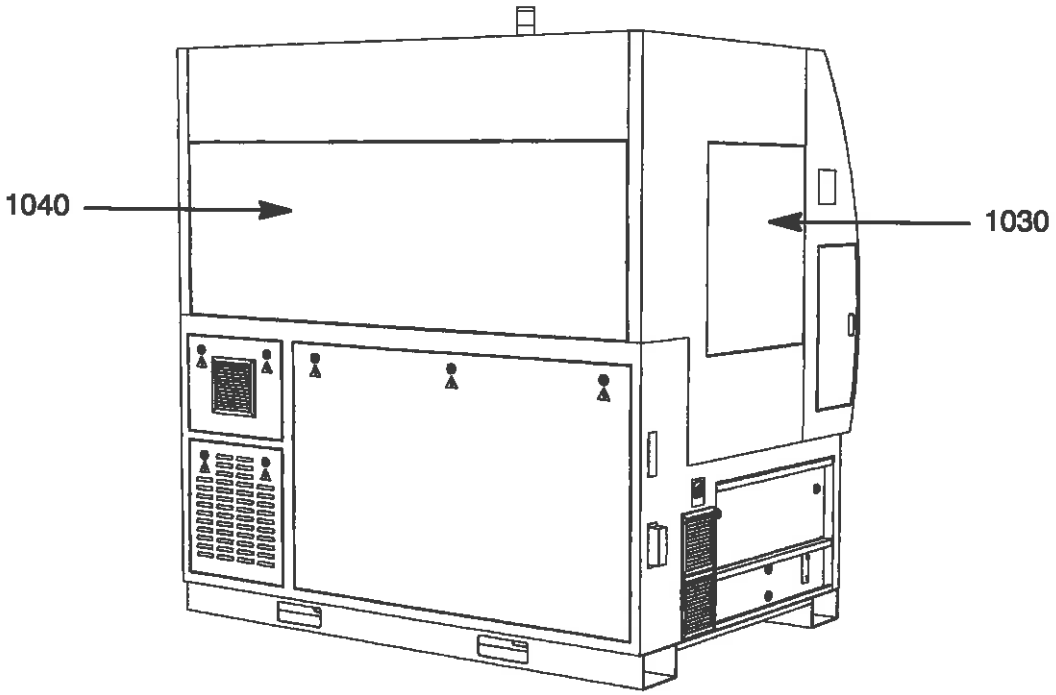

1.2 UNPACKING AND CLEANING THE MACHINE

UNPACKING THE MACHINE

- Pull out nails from the cover and then from the walls of the case.
- Remove the vacuum-packing plastic.
- Remove the wooden wedges and ropes that hold various items.
- Wash carefully with gasoline or petroleum-soaked cloth all rust-protected surfaces without damaging or disrupting anything.
- Wash on well ventilated premises.
- Avoid using compressed air and substances that could damage plastic materials.
- Take down the yellow pieces locking the frontwork unit and the pickoff spindle.

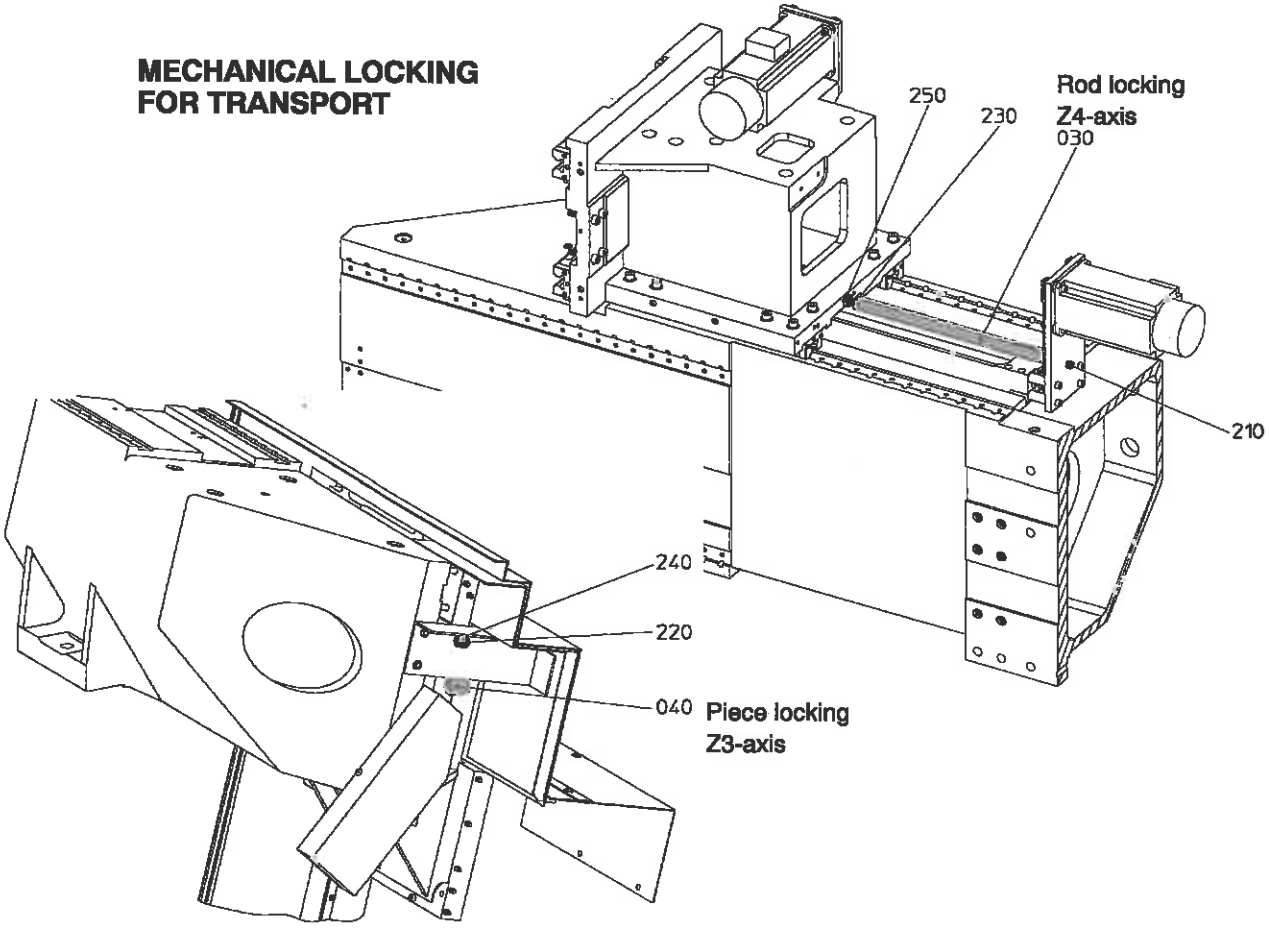

CLEANING THE MACHINE	
Maintenance Interval :	Clean the machine annually or at least every 3000 hours' operation.
To start with :	Lock the main switch.
What to do ?	How ? What for ? Notes
• Take down Access Panels 1030 and 1040.	
• Take out the chip pan (306034).	
• Empty the chip pan and clean it.	See Chip Pan (306034), Para. 7.1
• Empty the chip pan and clean it.	
• Pull out partially the cutting oil tank.	
• Change the cutting oil.	See Oil Tank (306025), Para. 7.2
• Clean the whole machine.	

1.3 TRANSPORT

In cases (seaworthy packing)

- Run cords or chains through as marked.

- For other handling methods, see Para. 1.5.

1.4 INSTALLATION

Fig. 101

The machine needs no levelling.

- Loosen first the screw of Adjustable Support Plate **F** and then put the machine on its other three Permanent Support Plates **E**.
- Fix the machine on the floor with three screws by running them through the holes in three Support Plates **E**.
  The screws merely fix the machine to the floor and cannot support its weight.
- Turn the screw of Adjustable Support Plate **F** and lock it with its nut to render the machine stable.
- Arrange a barfeeder according to its manufacturer's recommendations.
- Take into account the dimensions of various options that you can attach to the machine (bar feed tube, barfeeder, conveyor, etc.) because the floor plan shows the basic machine equipment only.

1.4.1 FLOOR PREPARATION

Fig. 101

The machine rests on three Support Plates **E**.

The floor at these 3 points must be hard, stable, vibration-free and perfectly level.

1.5 LIFTING THE MACHINE

With a low lift truck :

Fig. 103

- Pass the fork through Rectangular Passage **A**.
- Fork length min.: 1600 mm

With a lifting pulley block and beam :

Fig. 104

- Pass two approx. 50 mm dia. rods through Rectangular Passages **B**.
- Place the ends of rods in lifting slings.
- Hitch the lifting slings at the beam.

Attention ! Use Lifting Beam **P** to avoid indenting the guard.

With a fork lift truck :

Fig. 104 and 105

- Pass the fork through Rectangular Passages **B**.

Attention ! Insert the fork at the back side of the machine and not in the front.

Notes : Machine weight empty : DECO 0002: 2940 kg
DECO 0004: 3360 kg

- Do not use any lifting points other than those stated above.
- Make sure that the machine remains horizontal when lifted and put down.
- If you use a pulley, make sure that the slings do not indent the guard.

1.6 ELECTRIC INSTALLATION

1.6.1 INSTALLATION CHARACTERISTICS

Machine power :

Average effective power, approx.:	10 KW (acc. to machine application)
Installed power, approx.:	14 KVA

Power supply :

Tolerances for nominal voltage :	±10% and ±1 Hz for 50/60 Hz
Main circuit-breaker at machine input :	32 A

1.6.2 ELECTRIC CONNECTION

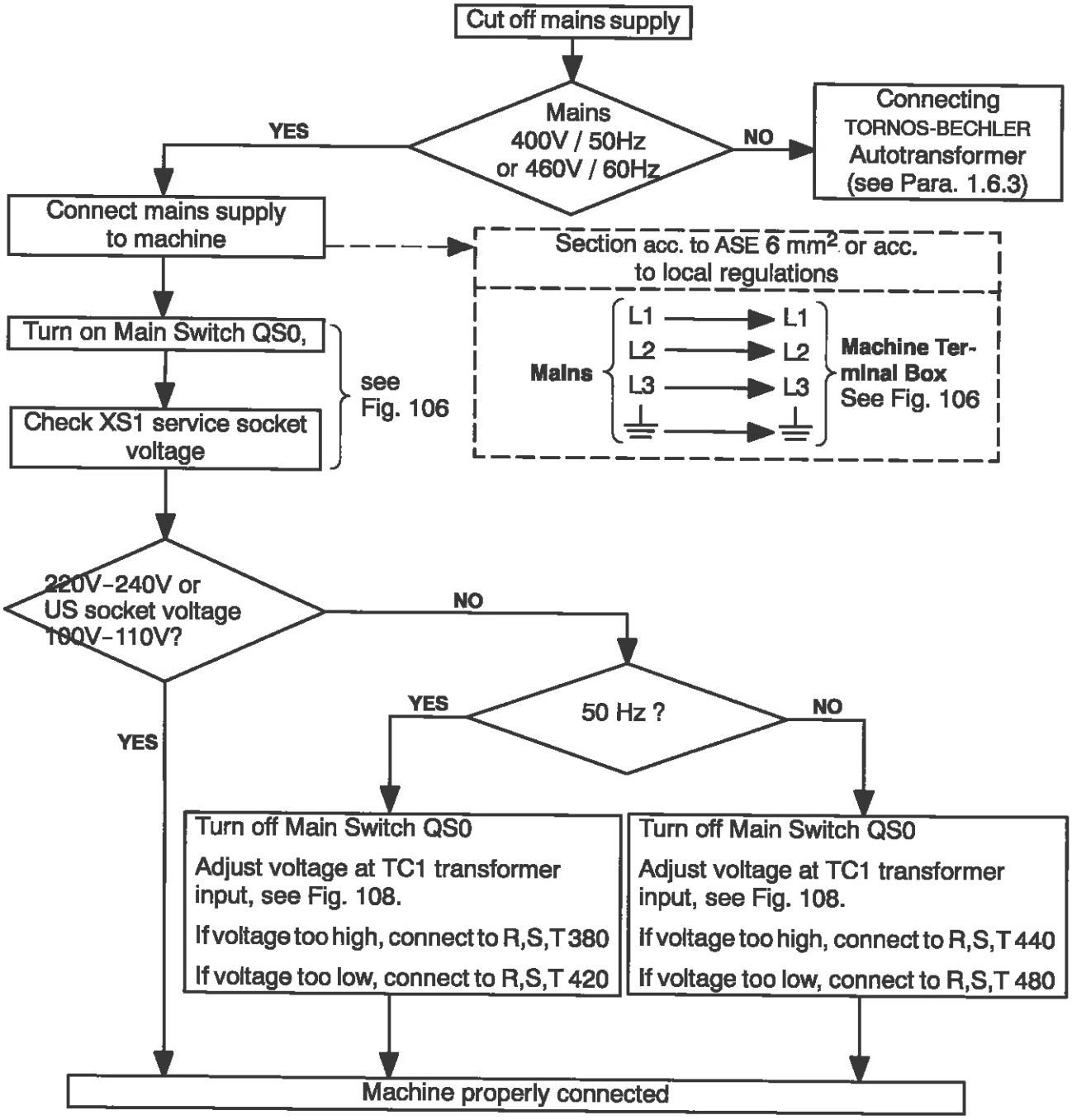

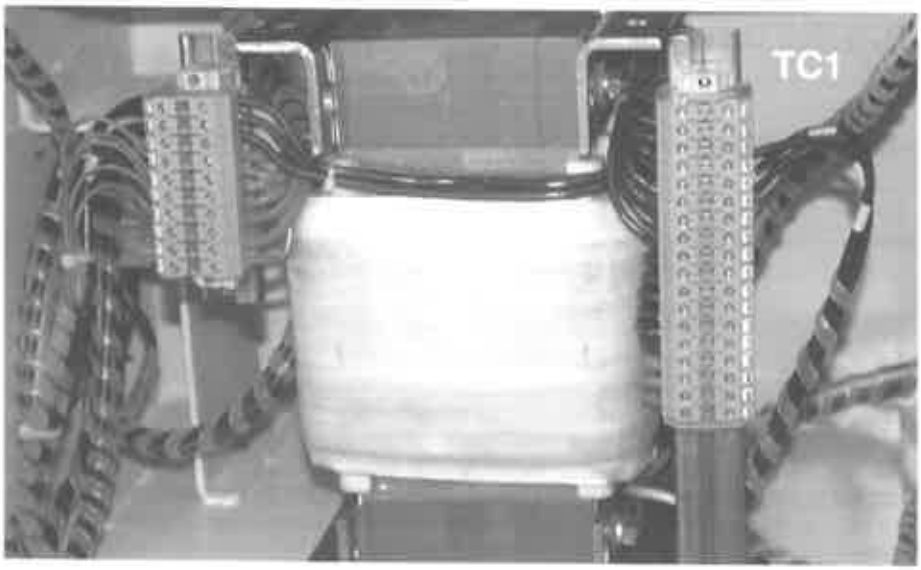

Fig.108

1.6.4 CONNECTING NON-TORNOS-BECHLER AUTOTRANSFORMER

Attention ! The autotransformer is located outside the machine.

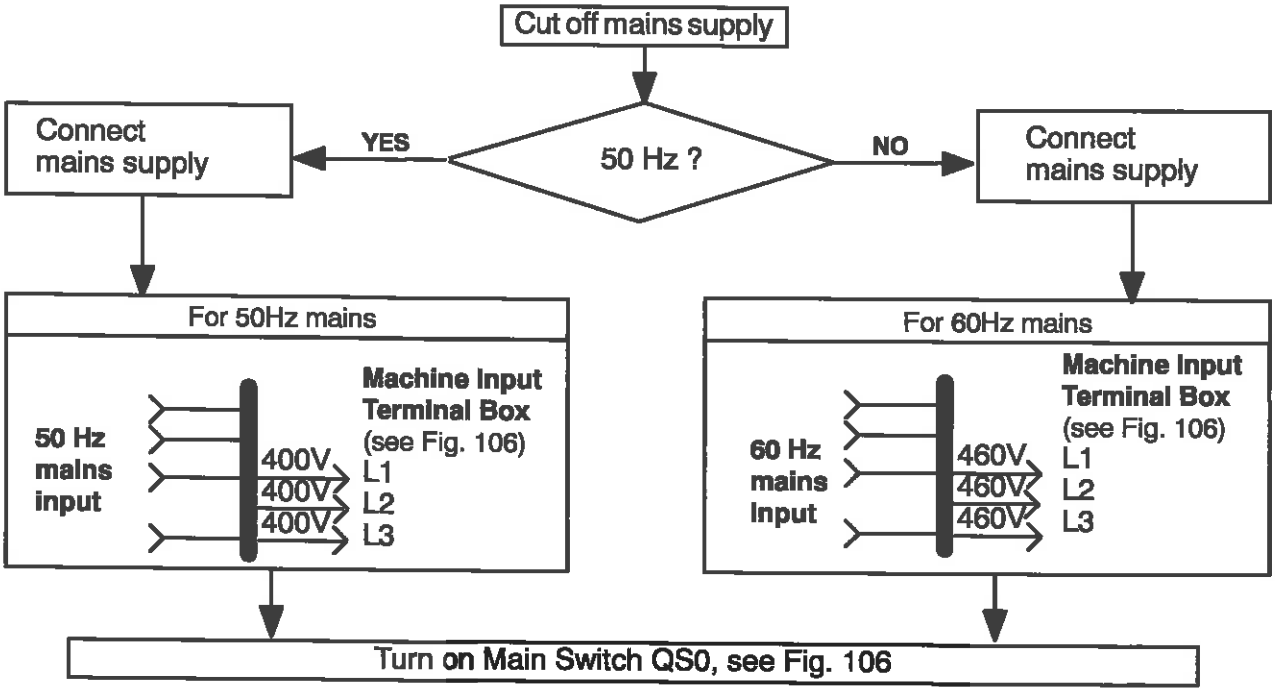

1.6.5 CONNECTING BARFEEDER AND CHIP CONVEYOR

Fig. 106 and 107

- Turn Main Switch QS0 off (0 setting) to disconnect the electric cabinet.
- Connect the barfeeder over Socket XS94.
- Connect the chip conveyor over Socket XS94.

2. MAINTENANCE, EQUIPMENT & MISCELLANEOUS

2.1 MANUAL LUBRICATION

- Lubricate manually via 55 nipples on the machine as shown in this manual and in the instruction inscriptions / plates on the machine.
- Consult also LOGBOOK 300408.

2.1.1 SUBSTITUTE LUBRICANTS CHART

RECOMMENDED LUBRICANTS AND QUANTITIES REQUIRED		LUBRICANT FORM	
		OIL for Spindle Collet	**GREASE** for Ball/Roller-Recirculation Slide-Blocks Guidebush Drive Pinions, etc.
LUBRICANT TYPE	**Type acc. to standards**	ISO VG 220	NLGI-2 EP
	MOTOREX	COREX EP1700 ISO220	MOTOREX 190EP
	Castrol	MAGNA CF 220	SPHEEROL EPL 2
	Mobil	VACTRA OIL No. 4	MOBILUX EP2
		TELLUS C220	RETINAX Grease MS
LUBRICANT QUANTITY REQUIRED for one machine	**Quantity**	approx. 40 cm^3	< 400 g
	sufficient for	6 months	6 months
	Notes	--	1 x 400 g cartridge delivered with machine

2.1.3 MAINTENANCE SCHEDULE

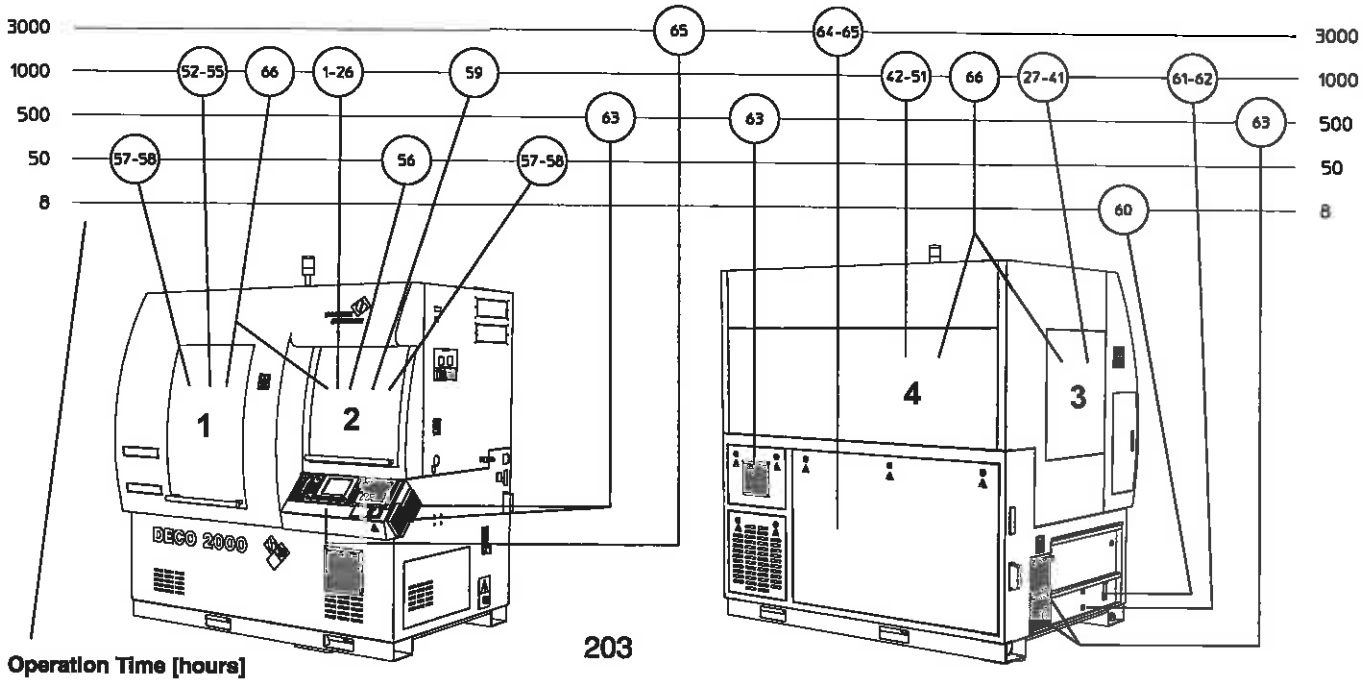

LOCATION OF LUBRICATION NIPPLES		
Nipple No.	**Lubricated Object**	**Nipple Location**
Access through Hatch 2 (headstock zone)		
1-4	Z1 rollerguide	On both sides of spindle carriage
5	Z1 ballscrew	RH side of spindle carriage
6	Guidebush drive shaft	Guidebush drive shaft end
7-8	X1 rollerguide	Top of X1-Y1 slide (X1, headstock side)
9	X1 ballscrew	Bottom of X1-Y1 slide (X1, headstock side)
10-11	X1 rollerguide	Bottom of X1-Y1 slide (X1, headstock side)
12-15	Y1 rollerguide	X1-Y1 slide (Y1, headstock side) on lubrication plate
16	Y1 ballscrew	X1-Y1 slide (Y1, headstock side) on lubrication plate
17-18	X2 rollerguide	Top of X2-Y2 slide (X2, headstock side)
19	X2 ballscrew	Bottom of X2-Y2 slide (X2, headstock side)
20-21	X2 rollerguide	Bottom of X2-Y2 slide (X2, headstock side)
22-25	Y2 rollerguide	Lubrication plate (X2 Y2, machining zone side)
26	Y2 ballscrew	Lubrication plate (X2 Y2, machining zone side)
Access through Hatch 1 (machining zone)		
27-30	X3 rollerguide	Cross slide (X3, LH side of machine)
31	X3 ballscrew	Cross slide (X3, LH side of machine)
32-35	Z3 rollerguide	Cross slide (Z3, LH side of machine)
36	Z3 ballscrew	Cross slide (Z3, LH side of machine)
37-40	X4 rollerguide	Cross slide (Y4, LH side of machine)
41	X4 ballscrew	Cross slide (Y4, LH side of machine)
52-55	Part disposal manipulator	
Access through Back Access Panel 4		
42-45	Y4 rollerguide	Top side of frame (back of machine)
46	Y4 ballscrew	Top side of frame (back of machine)
47-50	Z4 rollerguide	Top side of frame (back of machine)
51	Z4 ballscrew	Top side of frame (back of machine)

2.2 MAINTENANCE AND OTHER KNOW-HOW

What to do ?	How ? What for ? Notes

2.2.1 MANUAL GREASING OF ROLLERGUIDES AND BALLSCREWS

MANUAL GREASING OF ROLLERGUIDES AND BALLSCREWS	
Maintenance Interval :	Grease rollerguides and ballscrews semi-annually or at least every 1000 hours' operation.
To start with :	Fill up the grease pump.
• Grease over nipple.	4 to 5 grease shots per nipple.

See also : Manual Lubrication Table and Maintenance Schedule, Para. 2.1.3.
Substitute Lubricants Chart, Para. 2.1.1.

2.2.2 MANUAL GREASING OF PINION OR BEVEL GEARS

MANUAL GREASING OF PINION AND BEVEL GEARS	
To start with :	Take down the unit.
• Spread the grease carefully with your fingers.	See Substitute Lubricants Chart, Para. 2.1.1.: Grease NLGI-2EP

2.2.3 CHECKING TIMING BELT TENSION

CHECKING TIMING BELT TENSION	
• Twist the belt in the middle of a side ...	... with two fingers.
• Check if the angle of twist is approx. ¼ turn.	If so, you have the correct pre-tension.
• Tension the timing belt ...	... if required. See Tensioning Timing Belt, overleaf.

2.2.5 GUIDEBUSH LAPPING

General recommendation :

The drawn-type guidebushes are designed for nominal bar size ± 0.01 mm but bar dimensions often deviate from this figure:

It is therefore necessary to lap the guidebush for snug fit with the bar.

GUIDEBUSH LAPPING	
What to do ?	How ? What for ? Notes
• Take a length of bar of 200-300 mm and set it up on the lathe.	
• Fit the guidebush in its sleeve and pass the guidebush from behind on the bar.	• Tighten the guidebush by means of the collet nut.
• Put some lapping compound on the bar between the lathe and the back of the guidebush.	Diamond powder for carbide guidebushes.
• Make the bar turn at 100-200 rpm while holding the guidebush ...	... and moving it slightly backwards and forwards.
• From time to time check the guide bush diameter ...	... until satisfied.
• Adjust / compensate the play on the machine.	The lapped drawn-type guidebush, once released, must have a slight play against the bar.

Important ! **Do not fail to check carefully if the bars machine in the guidebush have consistent dimensions.**

INJECTING OIL WITH OIL GUN	
Refilling	
• See opposite page.	For oil, see Maintenance Schedule, Para. 2.1.3.
Fitting	
• Screw in and tighten manually Oil Gun Nozzle 010 in the hole of the refill plug ...	(For the refill plug, see Figure in Page 3.4/8) ... by revolving Oil Gun 030.
• Create a slight pressure in the gun...	... to bleed the hole under the refill plug.
• Loosen the refill plug ...	... by means of Knurled Ring 020.
Injection	
• Inject the oil.	
• Screw in and tighten the refill plug ...	... by means of Knurled Ring 020.
Final step	
• Take off Nozzle 010 from the refill plug ...	... by revolving Oil Gun 030.

2.2.7 CHANGING AIR FILTERS

CHANGING AIR FILTERS Fig. 205	
What to do ?	How ? What for ? Notes
• Take down the cover ...	... with a small-size screwdriver inserted in the lateral notches.
• Change the air filters.	Order air filters with TB Ident. Nos : TB 226084 255 x 255mm TB 226754 204 x204 mm TB 226105 130 x 130mm

2.2.8 CHANGING RELAYS IN ELECTRIC CABINET

Fig. 204

RELAY DATA

- Supplier : SCHRACK
- Type : RT-314024
- TB Ident No. 226807

2.2.9 CHANGING BATTERIES

CHANGING BATTERIES FOR ABSOLUTE AXIS-ENCODER Fig. 204 & 206	
To start with :	Prepare 6 batteries (1 per axis amplifier). FANUC Ident No. A06B-6073-K001 TB Ident. No. 226649
What to do ?	How ? What for ? Notes
• Turn on the machine and NC.	**Attention ! When you change batteries with the NC off, axis position will be lost.**
• Remove the battery housing cover.	
• Replace the batteries in the axis amplifier.	
• Put in place the battery housing cover.	
• Turn off the machine and NC.	Turn off and on the machine and NC when battery alarm occurs.

2.4 COOLANT SYSTEM AND CUTTING FLUID

THE USE OF CUTTING FLUIDS

Prohibition !

Do not use any cutting fluid with chlorinated solutions.
Should this ban be disregarded TORNOS-BECHLER declines any liability for the damage to sections or parts of the machine.

Caution !

Consult your Instructions 300195: Directions for Use of Water-Miscible Cutting Fluids

2.4.1 Refilling Coolant

REFILLING COOLANT	
Maintenance Interval :	Check coolant level daily and refill if required.
What to do ?	How ? What for ? Notes
Checking & Refilling • Check visually the coolant level and refill if required.	See also Oil Tank,

2.4.2 Flush Coolant Pump Strainer

Maintenance Interval :	Clean the coolant-pump strainer semi-annually or at least every 1000 hours' operation. See Maintenance Schedule,
Cleaning :	Sea Coolant Pump,

2.4.3 Flush Coolant Flow Sensor

Maintenance Interval :	Clean the coolant-flow sensor semi-annually or at least every 1000 hours' operation. See Maintenance Schedule,
Cleaning :	Sea Standard Coolant System,

3. MAIN MECHANICS (306349)

Components :

1000 Frame

1010 Powered S1-spindle

1020 Tool gangs on vertical

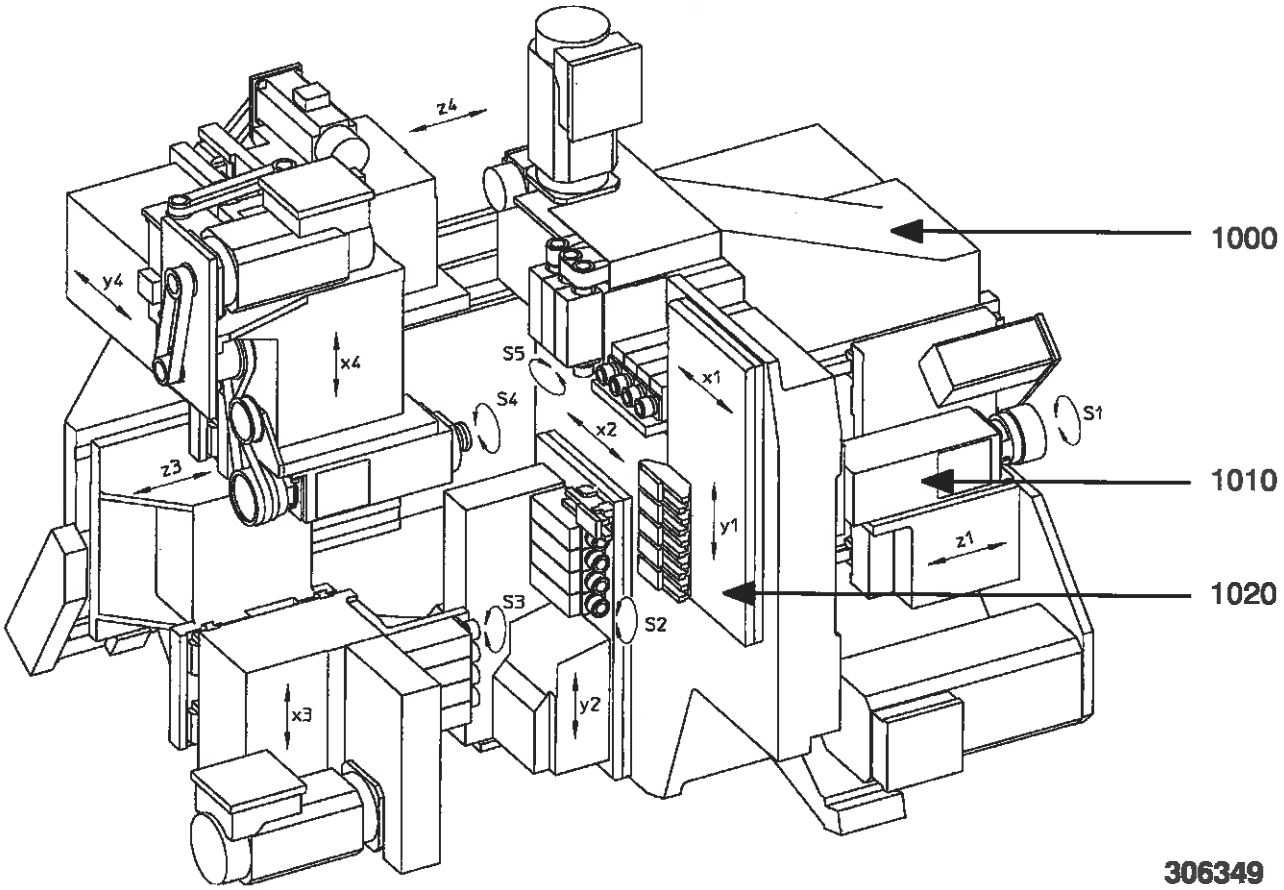

3.2 GIRDER (306002)

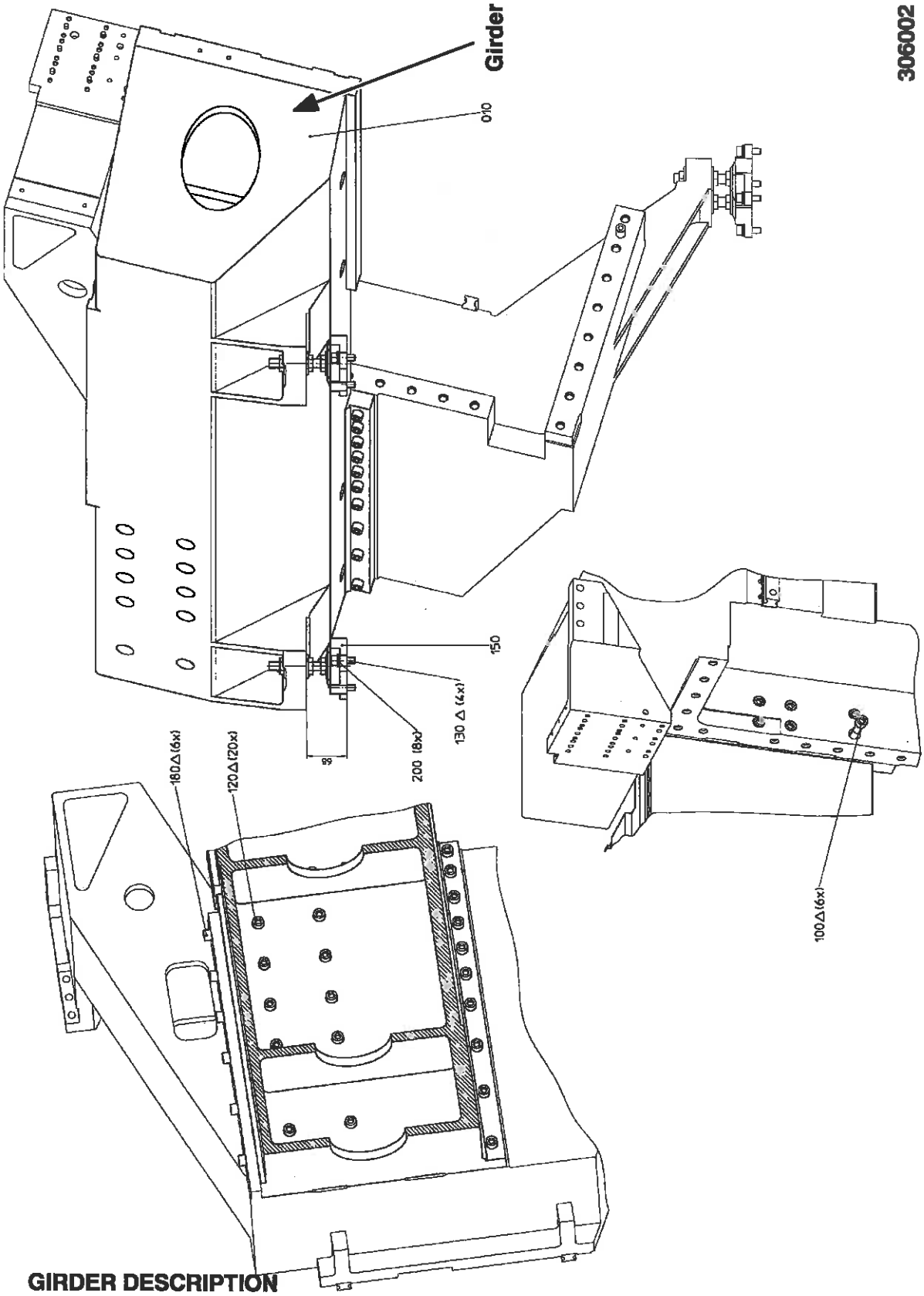

GIRDER DESCRIPTION

- Cast-iron girder : mounted with Frame (306001) for perfect stability
- Levelling and fitting : ex works
  (inside integral guard) with three anti-vibration elements

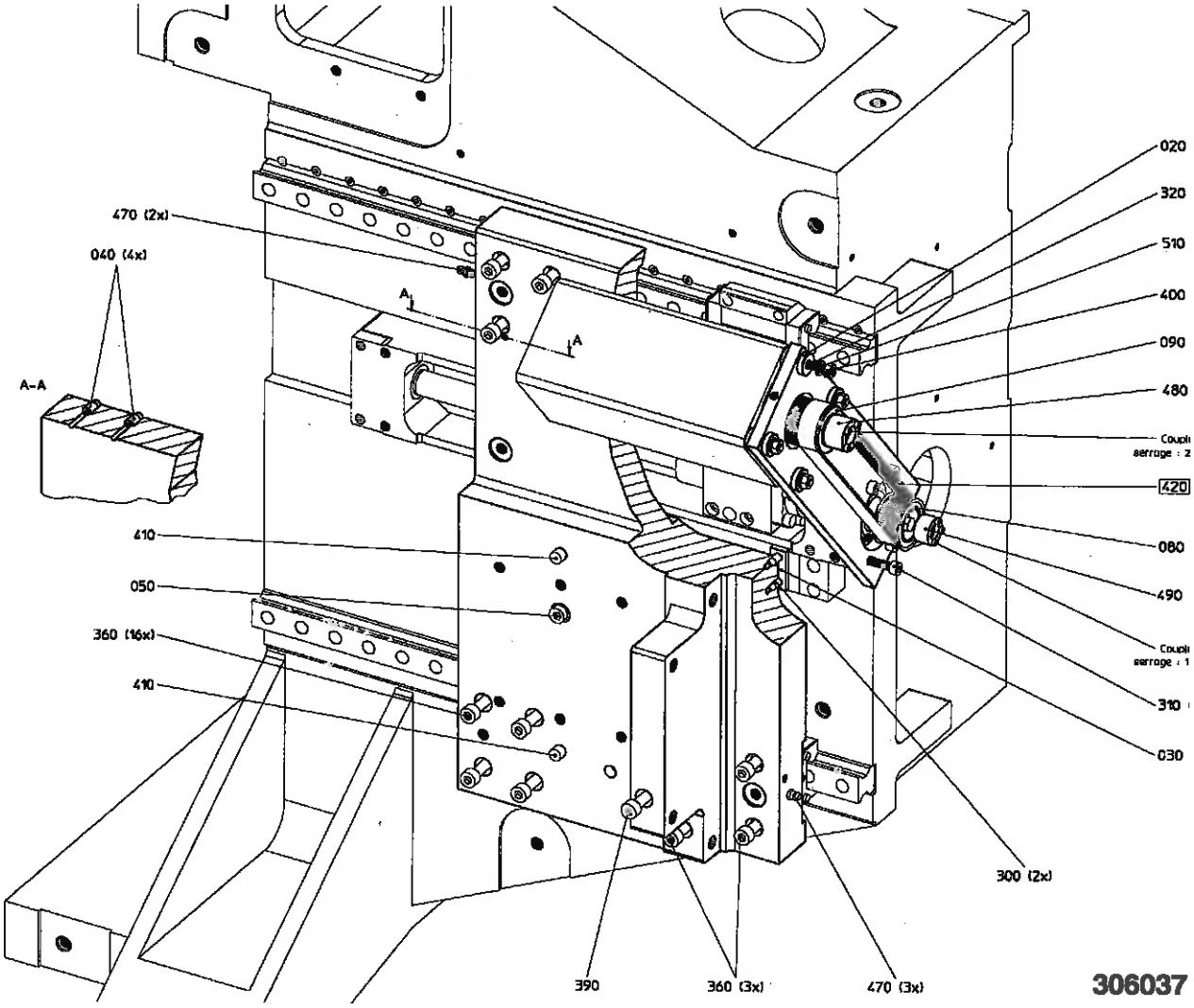

Z1-CARRIAGE OPERATION

- Headstock location : mounted on a support in Z1-carriage (which permits aligning the spindle with the bush bore)
- Carriage guiding : by four sliding blocks (with linear preloaded roller-recirculation bearings) on guiderails
- Feed motion : over ballscrew
- Travel of carriage and headstock, max. : 220 mm
- Spindle – guidebush collision prevention : with stops

Attention ! Other drive belts must be fitted if the guidebush drive is installed.

3.3.1 230 MM-BALLSCREW (306047)

Components :

070 Housing

020 Ballscrew

030 Sleeve

060 Ball bearing

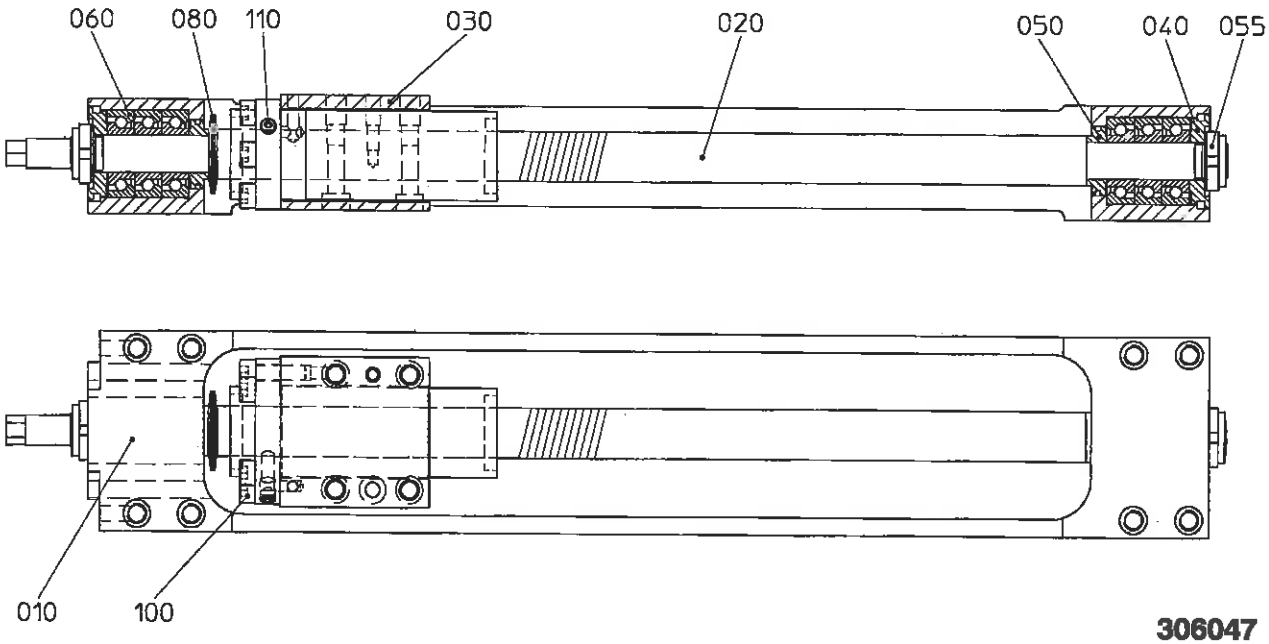

306047

230mm-BALLSCREW APPLICATION

- 20 mm-DECO in Z1/X3/Z3
  The ballscrew unit is of modular design.

230mm-BALLSCREW CHARACTERISTICS

• Travel :	230 mm
• Overall dimensions :	449 x 48 x 80
• Weight :	5.5 kg
• Ballscrew ∅ :	20 mm
• Ballscrew lead :	5 mm
• Speed :	4000 rpm
• Greasing :	ex works

REPAIRS

- 230mm-ballscrew (306047) : eligible for STANDARD REPAIR, see Para. 2.3.

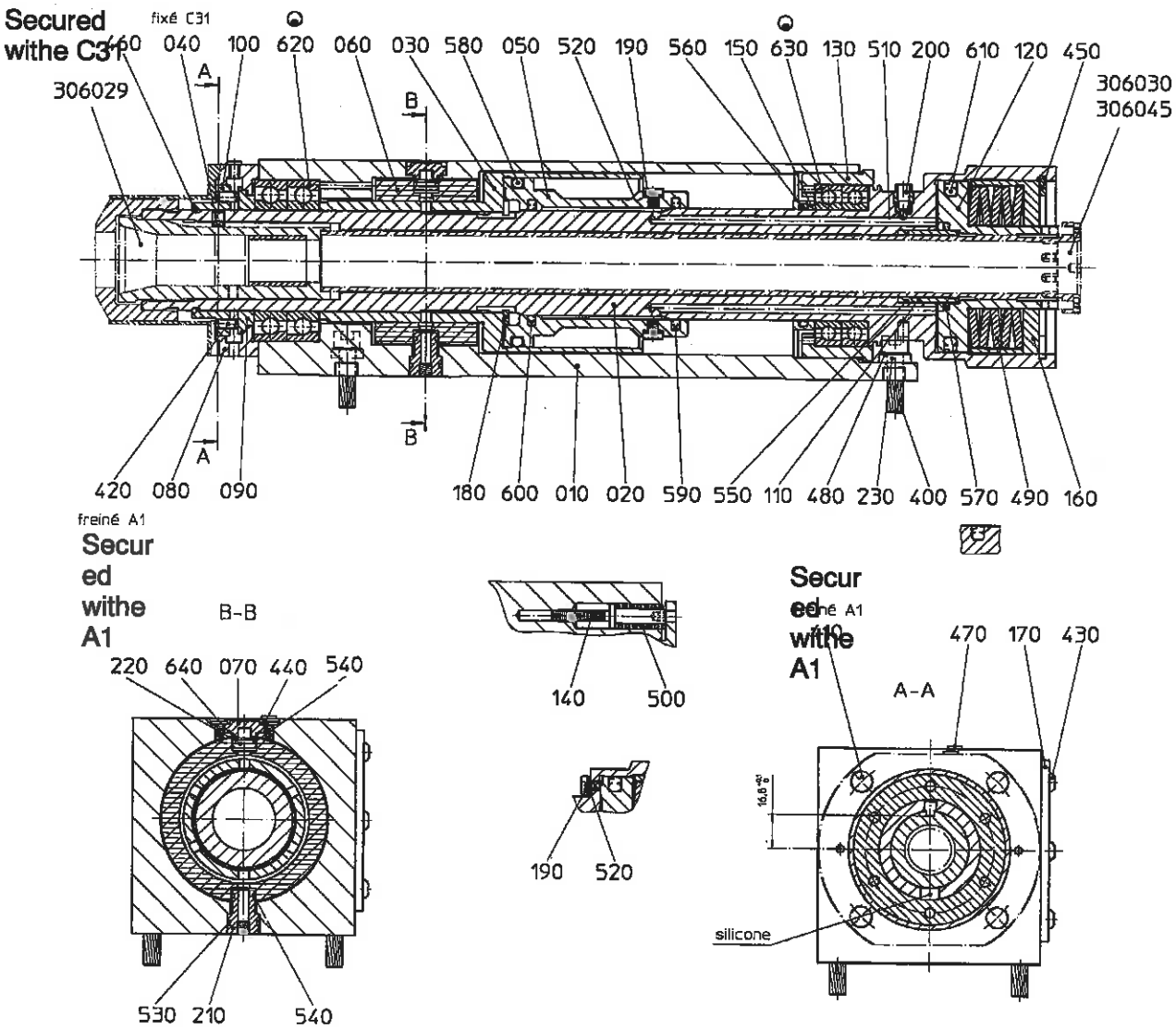

S1-SPINDLE CHARACTERISTICS

•	Collet :	Standard :	F25 No. 76-64
		Optional :	F20 No. 76-201
•	Bar capacity :	round :	20 mm
		hex :	17 mm
		square :	15 mm
•	Thrust tube :	Standard ∅ :	11
•	Space required for 20mm-∅ collet sleeve :		up to 113 mm off nose
•	Chucking force :	Standard :	1200 daN (from 370 daN when variable)
		Optional :	infinitely variable up to 700 daN
•	Pneumatics :	Operating pressure :	5 to 7 bar
		Air consumption :	< 4.46 m^3n/h (at 5 bar, collet open)
			< 1.10 m^3n/h (optional variable force)
		Air :	dry
•	Speed :	acc. to motor :	max. 10000 rpm
•	Bar tolerance, max.:		IT 11

What to do ?	How ? What for ? Notes

HEADSTOCK INSTALLATION (see Fig. in Page 3.4/8)	
Mounting	
• Set the headstock in place.	
• Fit four Spring Washers 480 and four Washers 230 ...	... on four Screws 400.
• Screw in four Screws 400 ...	... until play is taken.
• Center the spindle.	See Lateral Alignment below and Center Height Adjustment, Page 3.3/6.
• Fit the drive belt on the pulley while turning the spindle ...	... if required.
• Mount the guards ...	... if required.
Dismounting	
• Take down the guards ...	... if required.
• Take down the drive belt ...	... if required.
• Unscrew four Screws 400.	
• Remove four Spring Washers 480 and four Washers 230.	
• Take down the headstock	

ALIGNING S1-SPINDLE LATERALLY (see Fig. in Page 3.4/8)	
To start with :	Install the headstock, see above.
• Push the spindle forward ...	... as much as the play of Screws 430 / 440 allows.
• Align the spindle laterally ...	... by unscrewing Eccentric 1060 : The headstock retracts.
	If you overshoot the adjustment, start from the beginning.

S1-SPINDLE OPERATION

• Collet axial motion :	No such motion to assure highest precision.
• Spindle support :	Two spring-preloaded precision ball bearings pregreased for life.
• Spindle drive :	over a timing belt and with no backlash
• Pneumatic collet opening :	over a revolving joint with no friction to preclude any thermal effects

What to do ?	How ? What for ? Notes

CHANGING COLLET CAPACITY
For S1-Spindle

To start with : Set the headstock carriage in its rear position.
Open the spindle collet.

Dismounting • Pull out Collet 1020 and Collet Sleeve 1040 with Collet Spring 1030.	
Mounting • Grease new Collet Sleeve 1040 inside and outside. • Insert new Collet Sleeve 1040 with its Spring 1030. • Insert new Collet 1020.	• Align the keyway of Collet 1020 with Key 1050.

CHANGING THRUST TUBE CAPACITY
For S1-Spindle

Note : Do not change the thrust tube for the pickoff spindle.
To start with : Dismount the guiding tube with its support.

Dismounting • Undo two Screws 1090 ...	... until they come off the notches of Piston 120.
• Unscrew and remove Thrust Tube 1080 ...	... manually.
Mounting • Insert and screw in new Tube 1080 ...	... until it is slightly tightened.
• Secure Tube 1080 with two Screws 1090.	
• Set the thrust tube.	See Thrust Tube Setting, overleaf.

VISUAL CHECKING OF PRIMARY PISTON POSITION

Checking Interval : Check the position weekly or every 50 hours' operation.

To start with : Open the spindle collet.

What to do ?	How ? What for ? Notes
Checking • Measure Distance *x* between Blue Piston 050 and its stop.	
Action • Refill the chucking hydraulics ...	... if Distance *x* < 2 mm. See Refilling Chucking Hydraulics, overleaf.

CHUCKING OPERATION

Hydraulics	Collet closed	Collet open
Full	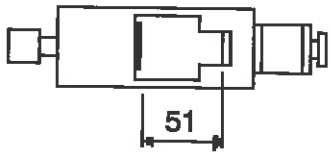	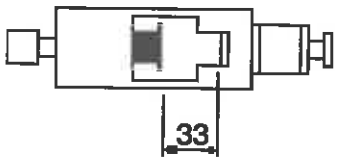
Lowest operational level Proceed to refill.	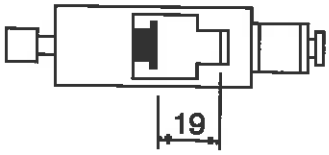	
Opening impossible	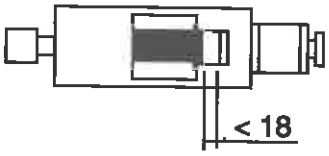	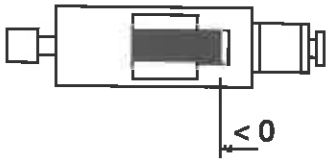

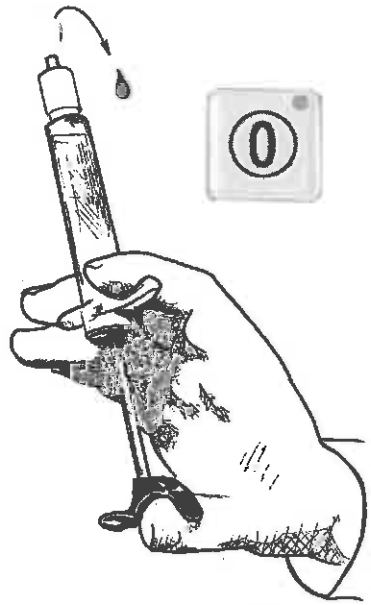
0

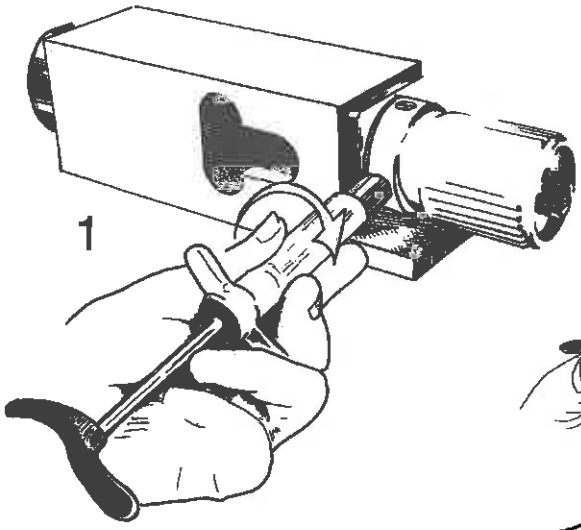
1

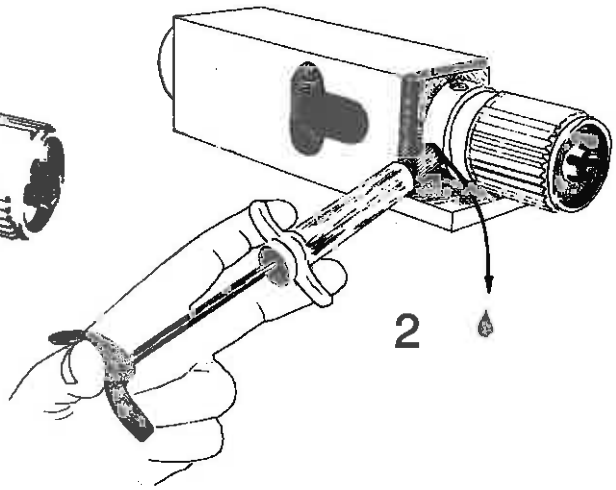
2

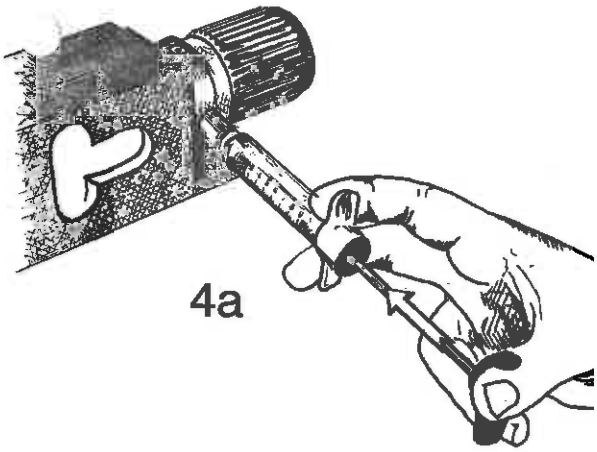
4a

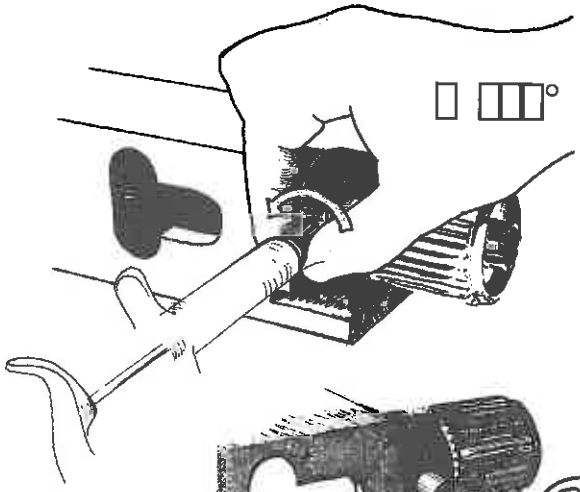
3

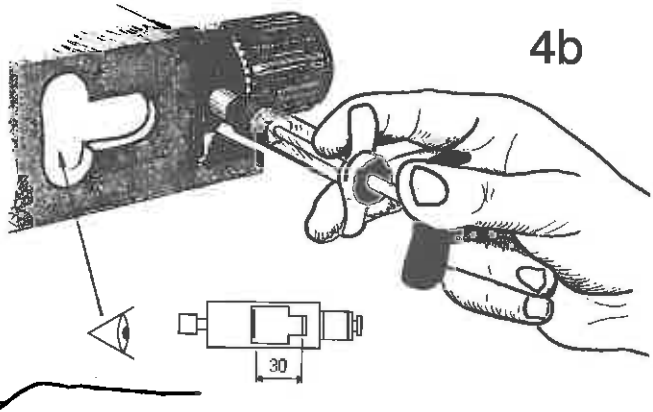
4b
30

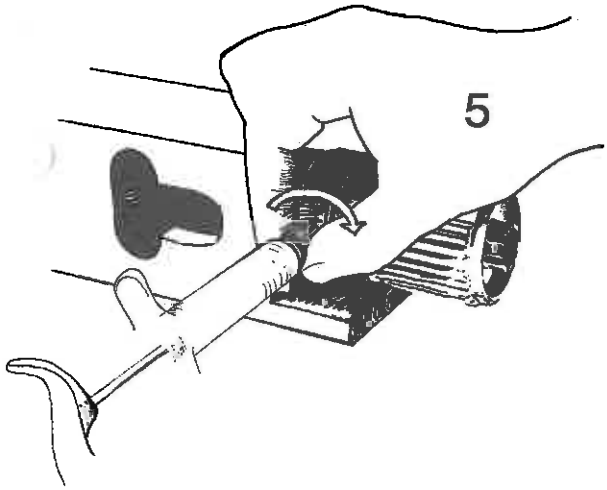
5

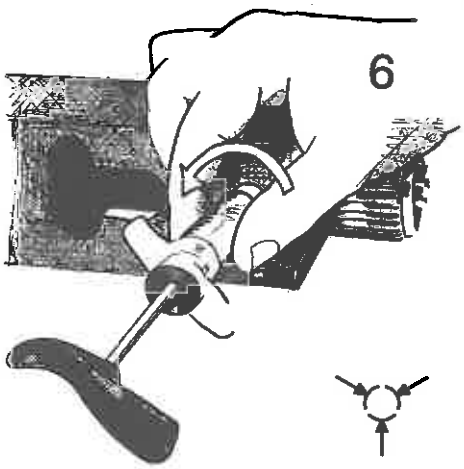
6

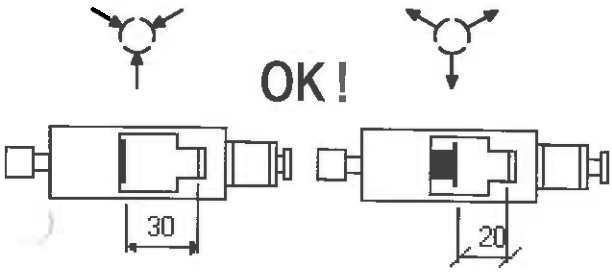
OK !
30
20

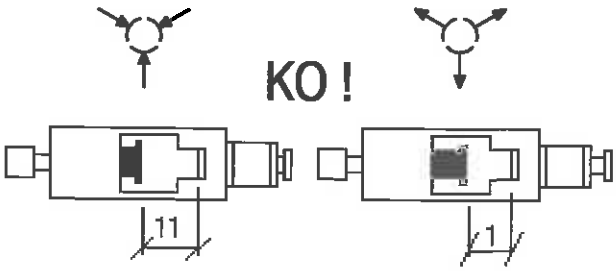
KO !
11
1

What to do ?	How ? What for ? Notes

VARIABLE CHUCKING FORCE SYSTEM INSTALLATION

To start with : Install the headstock. See Page 3.4/11.

Mounting • Fix in place the pre-assembled unit consisting of Pressure Reducing Valve 120, Discharge Valve 140, Manometer 150 and various connections ... • Connect various pipes.	... with two Nuts 200.

VARIABLE CHUCKING FORCE SYSTEM OPERATION

- Collet opening : at full pressure of 6 bar
- Pressure setting : with collet closed
  The pressure pushes the collet spring out of the spindle collet.

SETTING CHUCKING FORCE PRESSURE

Setting • Keep screwing up / down the head of Pressure Reducing Valve 120 to set the pressure ...	... until satisfied.

3.7 S1-SPINDLE DRIVE (306003)

S1-SPINDLE DRIVE CHARACTERISTICS

- Speed : 0 – 10000 rpm
- Motor – spindle ratio : 1

			Contin. Duty		Intermit. Duty (max. 30 min)
•	Motor : FANUC alpha 3		3.7 kW		5.5 kW
•	Spindle torque available at :	0-1500 rpm	23.55 Nm		35.00 Nm
		6000 rpm	5.89 Nm		8.75 Nm
		10000 rpm	2.04 Nm		3.36 Nm
•	Acceleration time :	0-6000 rpm	1.92 s *	to	1.30 s *
		0-10000 rpm	5.95 s *	to	3.89 s *

* The final characteristics depend on the commissioning setup.

S1 CHARACTERISTICS at 0 – 10000 rpm

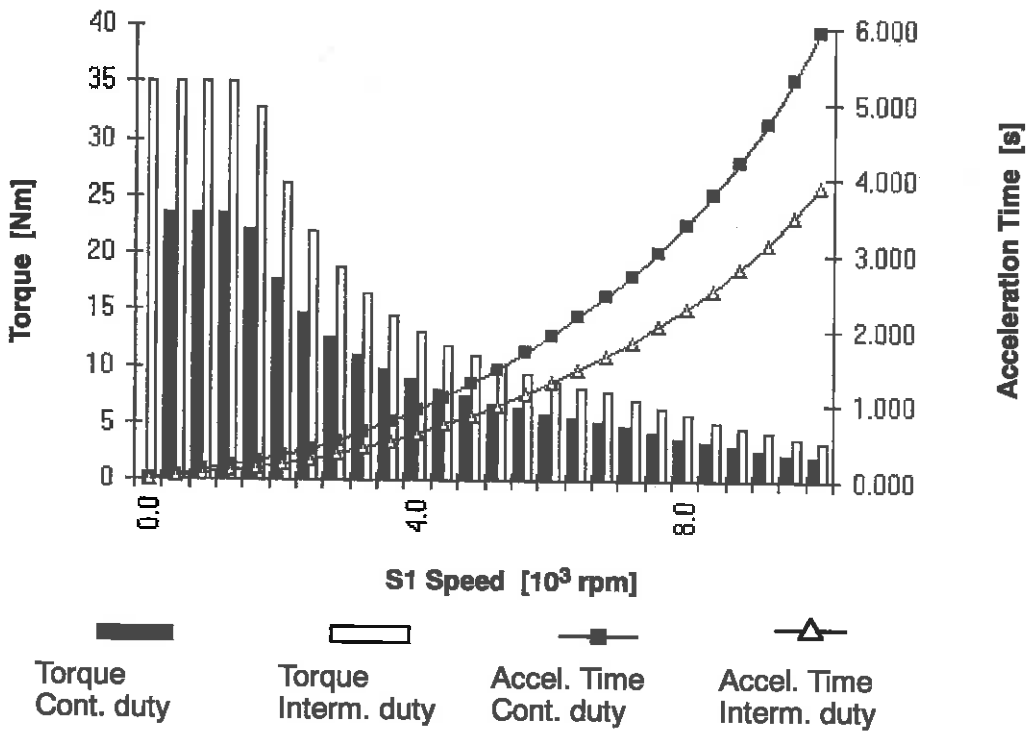

309

3.7.2 S1-SPINDLE DRIVE WITHOUT GUIDEBUSH TRANSMISSION

Components :

080 Encoder plate

310 Encoder timing-belt (Series 1 to 13)

320 Spindle timing-belt

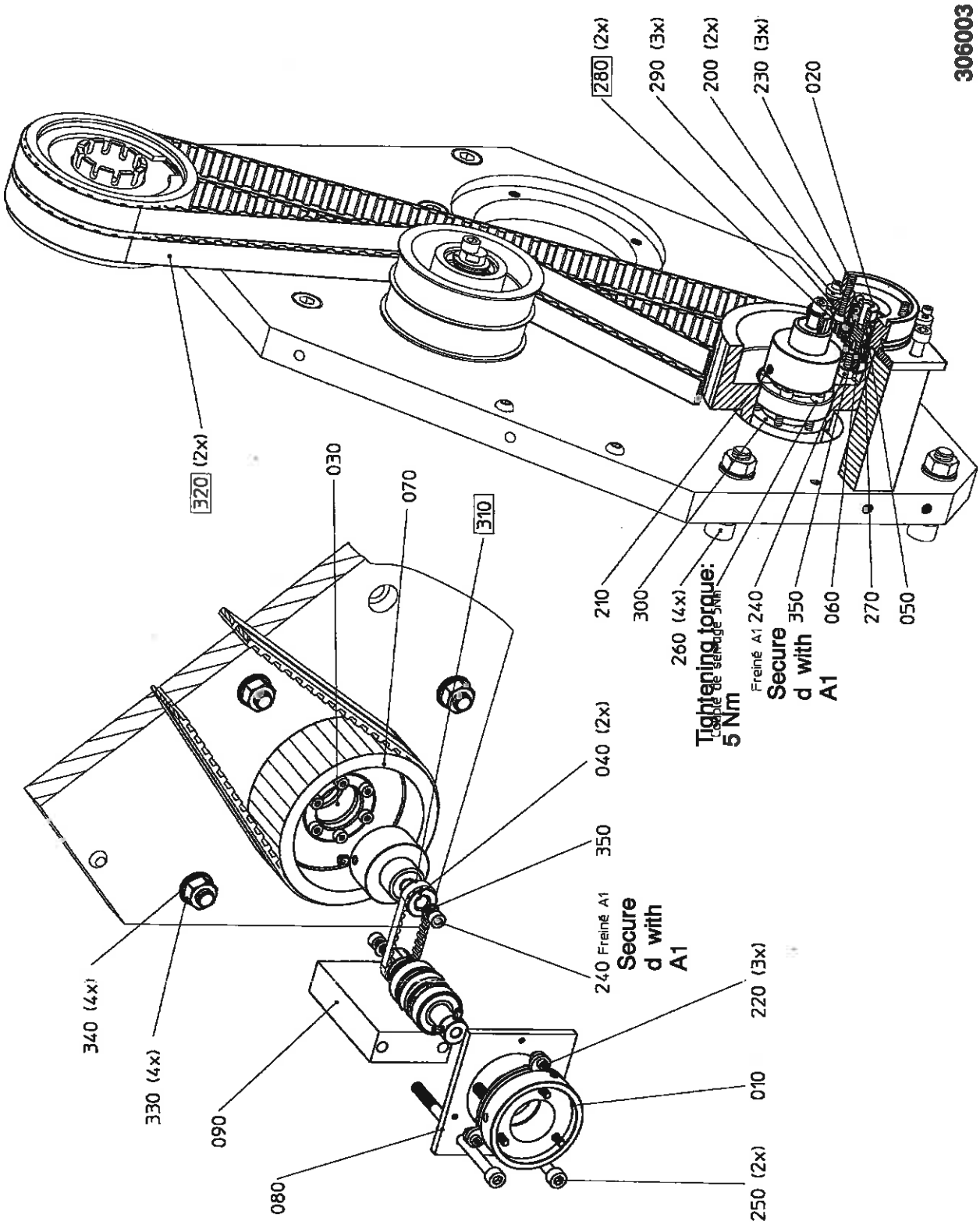

What to do ?	How ? What for ? Notes

3.7.4 CHANGING TIMING BELTS FOR S1-SPINDLE DRIVE

Dismounting • Take down the carriage guards. • Relax the expanding roller. • Unscrew Locking Screw 1010 of Coupling 370 on the motor-side axis. • Lay down encoder with its coupling. • Throw off the belts.	
Option • Change the expanding roller position ...	... when you install or take down Optional Guidebush Drive (306027)
Mounting • Fit in new belts. • Tension the belts with the expanding roller. • Fit in position the encoder with its coupling. • Tighten the three fastening screws of the encoder. • Tighten Lock Screw 1010 of the flexible coupling on the motor-side axis. • Remount the guards.	TENSIONING TIMING BELT see Para. 2.2.4.

3.7.5 CHANGING ENCODER COUPLING FOR S1-SPINDLE DRIVE

Dismounting • Unscrew and remove three Encoder Fastening Screws 220. • Lay down the encoder with its coupling. • Loosen two Screws 250 fastening Encoder Plate 080 to its Support 090. • Insert Centering Ring 1020 with Centering Sleeve 1030 in the encoder plate borehole. • Slip Sleeve 1030 onto the motor shaft end pin ... • Tighten two Screws 250. • Remove the accessories :	... to center Encoder Plate 080. i.e. centering ring and sleeve.
Mounting • Install a new flexible coupling on the encoder. • Mount and fasten the encoder. • Tighten the lock screw of the coupling.	

3.8.1 VERTICAL SUPPORT (306005)

- Cast-iron construction for perfect stability.

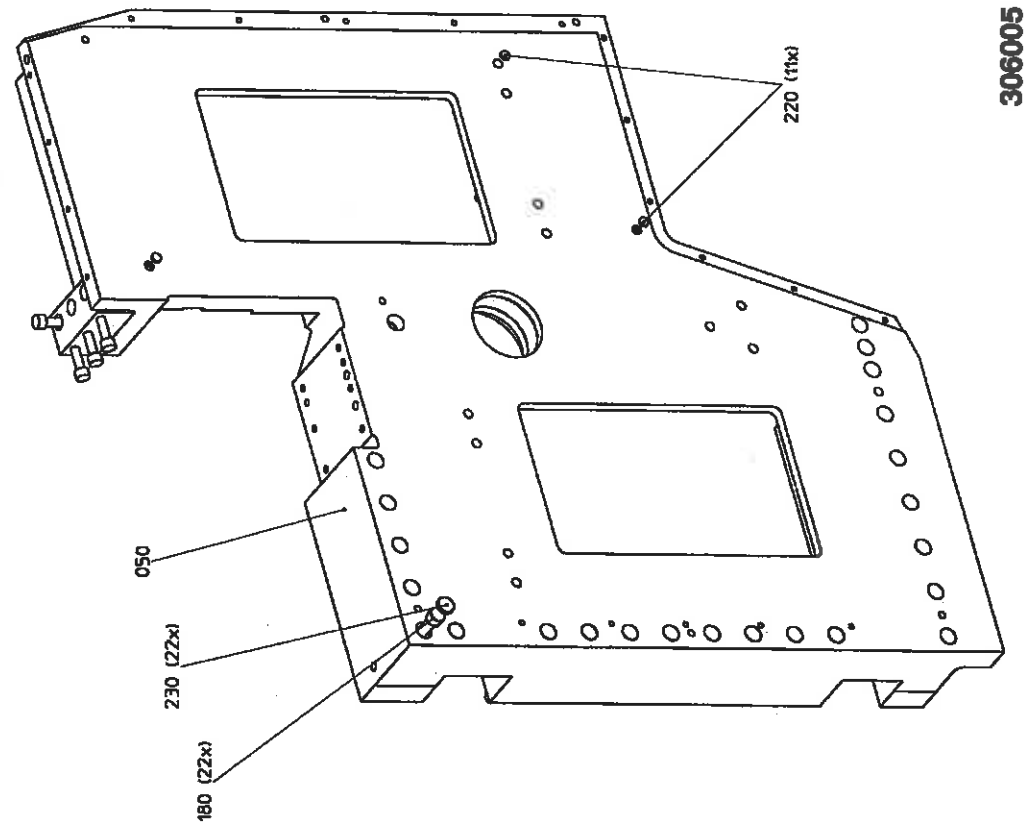

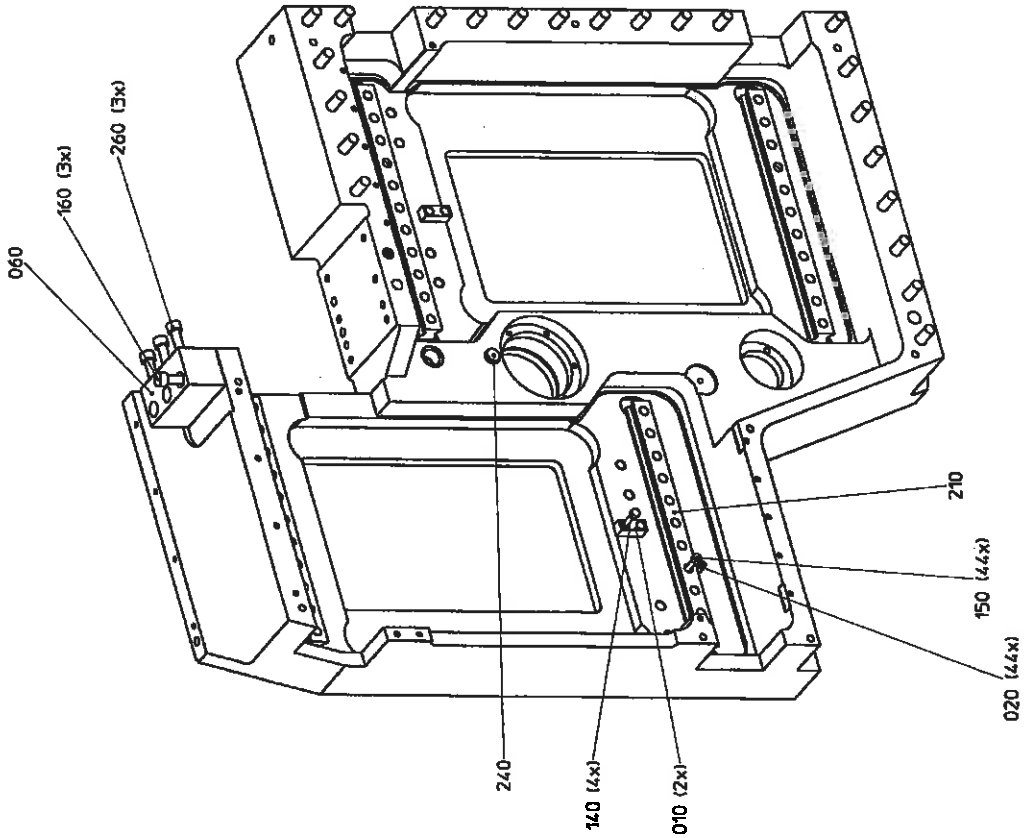

3.8.2 X1-Y1 CROSS SLIDE (305006)

Components :

010 X1/X2 cross slide
020 Y1/Y2 cross slide
030 Front gang plate
080 Nipple-system plate
090 Coolant inlet pin
160 Shock absorbers
300 Guiderails
340 Collet sleeve
350 Collet sleeve

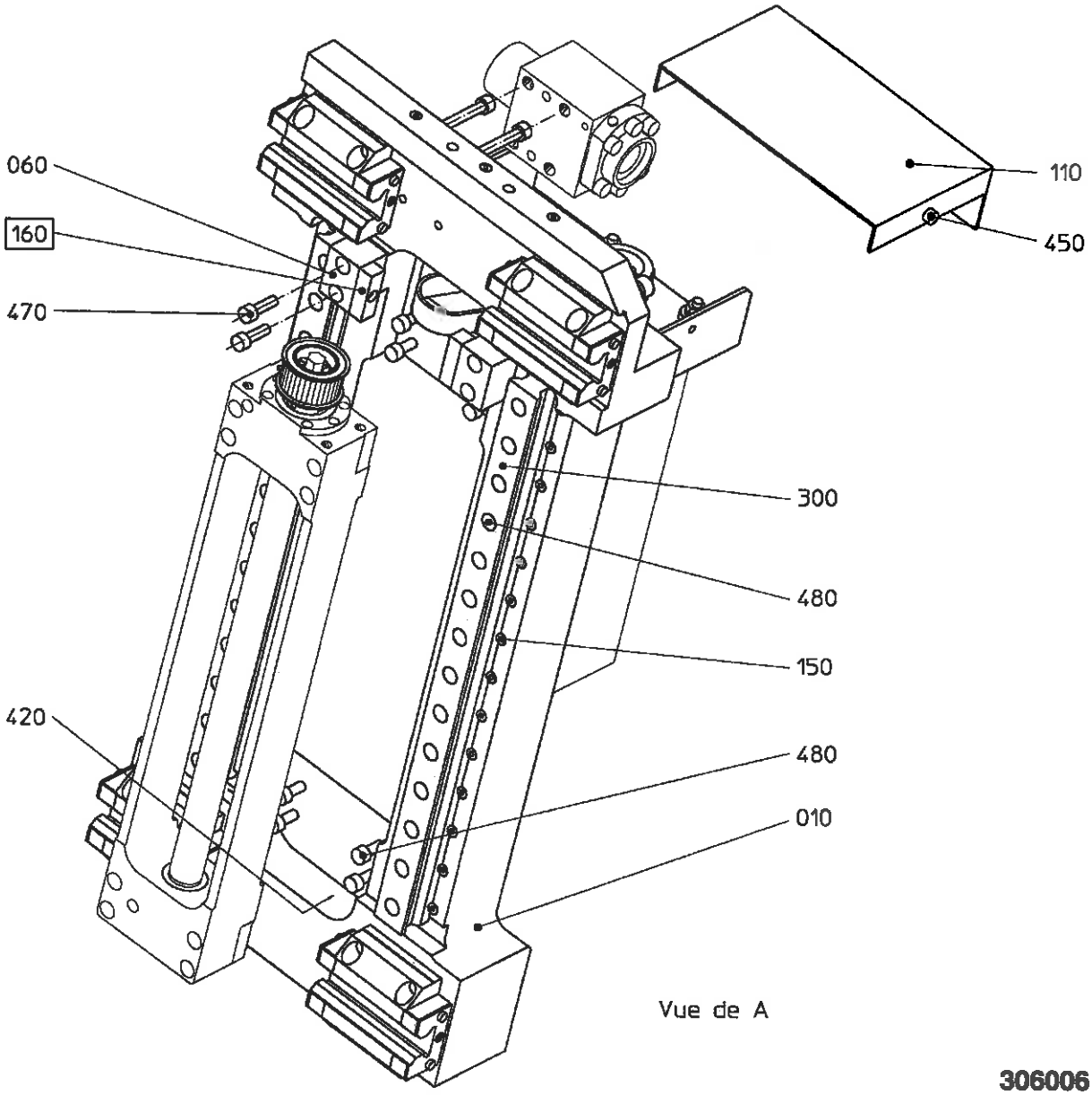

306006

X1-AXIS DATA

- Traversing rate : max.: 20 m/min
- Axis travel max.: 50 mm

Y1-AXIS DATA

- Traversing rate : max.: 20 m/min
- Axis travel max.: 190 mm

AXIS OPERATION

- Axis guiding : by 4 sliding blocks (with linear preloaded roller-recirculation bearings) on guiderails
- X and Y feed motion : via ballscrews coupled with motors
- Thermal effect prevention : Ballscrews expanded between their bearings

TRAVEL LIMITS FOR CONFLICTING GEOMETRICS

- Check each tool for conflicting geometrics if several tool systems are used simultaneously.

  The rule given below specifies conflicting geometrics in operation for the machine with the standard equipment :
  (See also Chapter 2: TOOL GEOMETRICS, Instructions 300402: PROGRAMMING)

  X1-Y1 and X2-Y2 GANGS with CONFLICTING GEOMETRICS

  These tool gangs (so called combs) must never cross in X :

  If $X1 + X2 > 0$ the tools are in conflict.

GREASING ROLLERGUIDES AND BALLSCREWS

Maintenance Interval : Grease rollerguides and ballscrews semi-annually or at least every 1000 hours' operation.

To start with : Fill up the grease pump, see Para 2.1.2.

What to do ?	How ? What for ? Notes
• Pump the grease in through five Nipples 360 of X1-axis.	4 to 5 grease shots per nipple. 4 roller-recirculation slide-blocks and ball-screw
• Pump the grease in through five Nipples 360 of Y1-axis.	4 to 5 grease shots per nipple. 4 roller-recirculation slide-blocks and ball-screw

See also : Manual Lubrication Table and Maintenance Schedule, Para. 2.1.3
Substitute Lubricants Chart, Para. 2.1.1

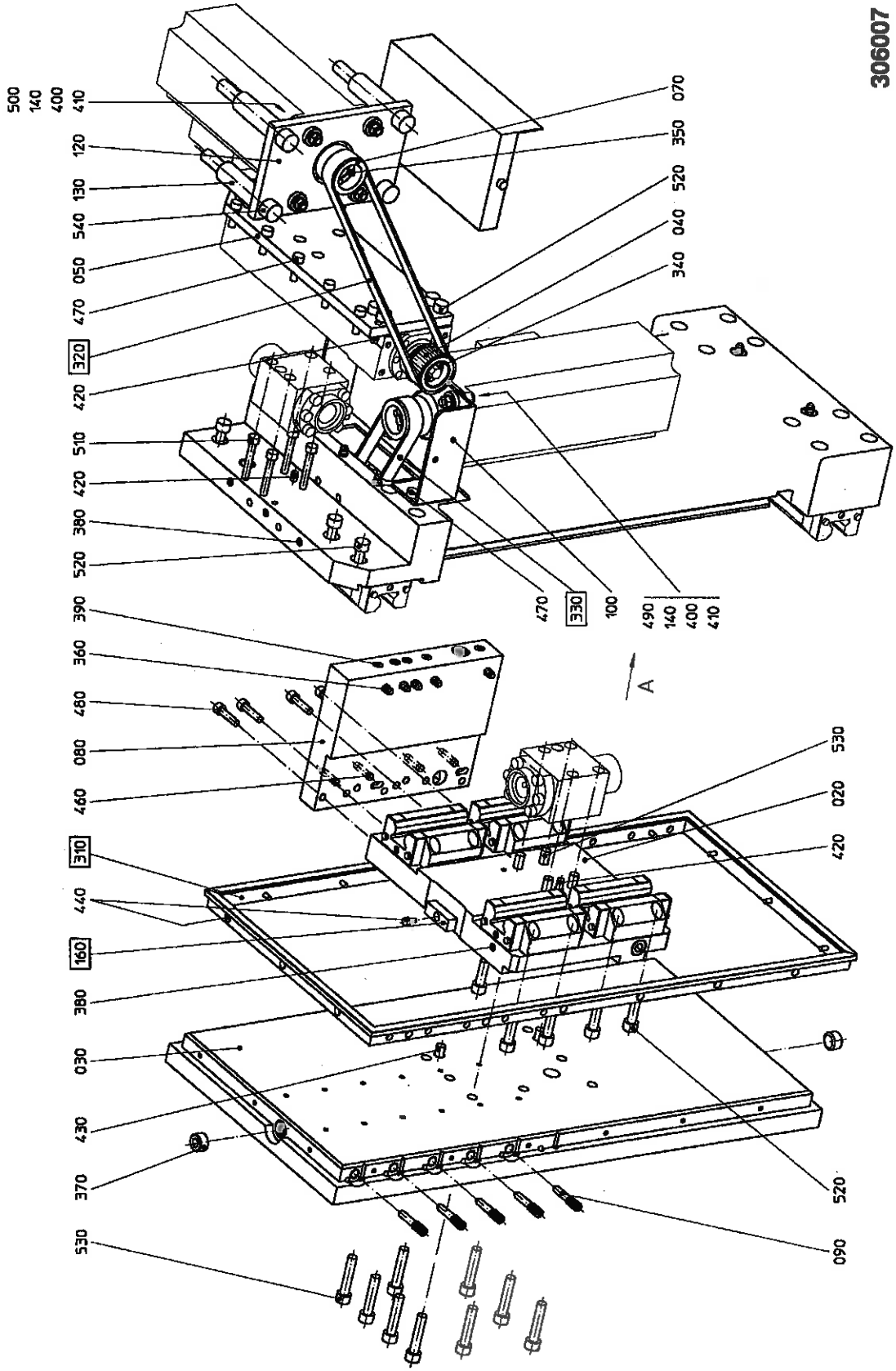
306007
500
140
400
410
120
130
540
050
470
320
420
510
420
380
520
390
360
480
080
460
310
440
160
380
030
430
370
530
070
350
520
040
340
470
330
100
490
140
400
410
A
530
020
420
520
090

3.8.4 63 MM-BALLSCREW (306044)

Components :

070 Housing
020 Ballscrew
030 Sleeve
060 Ball bearing

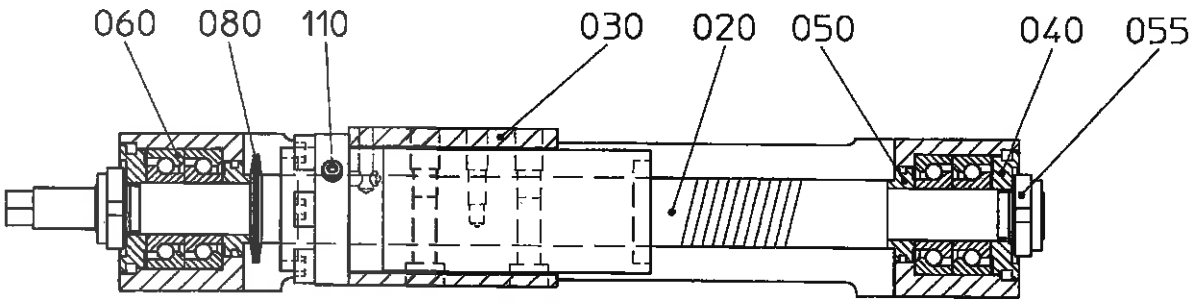

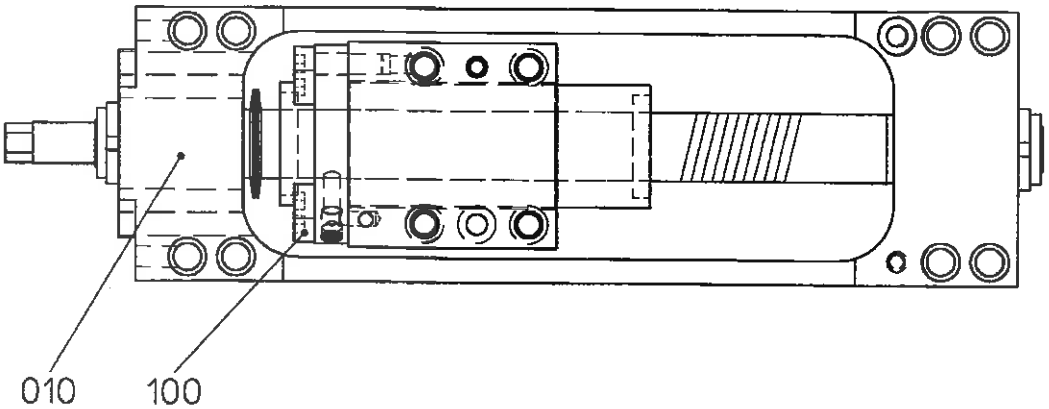

306044

63mm-BALLSCREW APPLICATION

- 20 mm-DECO in X1/X2
  The ballscrew unit is of modular design.

63mm-BALLSCREW CHARACTERISTICS

• Travel :	63 mm
• Overall dimensions :	260 x 48 x 80
• Weight :	4.2 kg
• Ballscrew ∅ :	20 mm
• Ballscrew lead :	5 mm
• Speed :	4000 rpm
• Greasing :	ex works

REPAIRS

- 63mm-Ballscrew (306044) : eligible for STANDARD REPAIR, see Para. 2.3

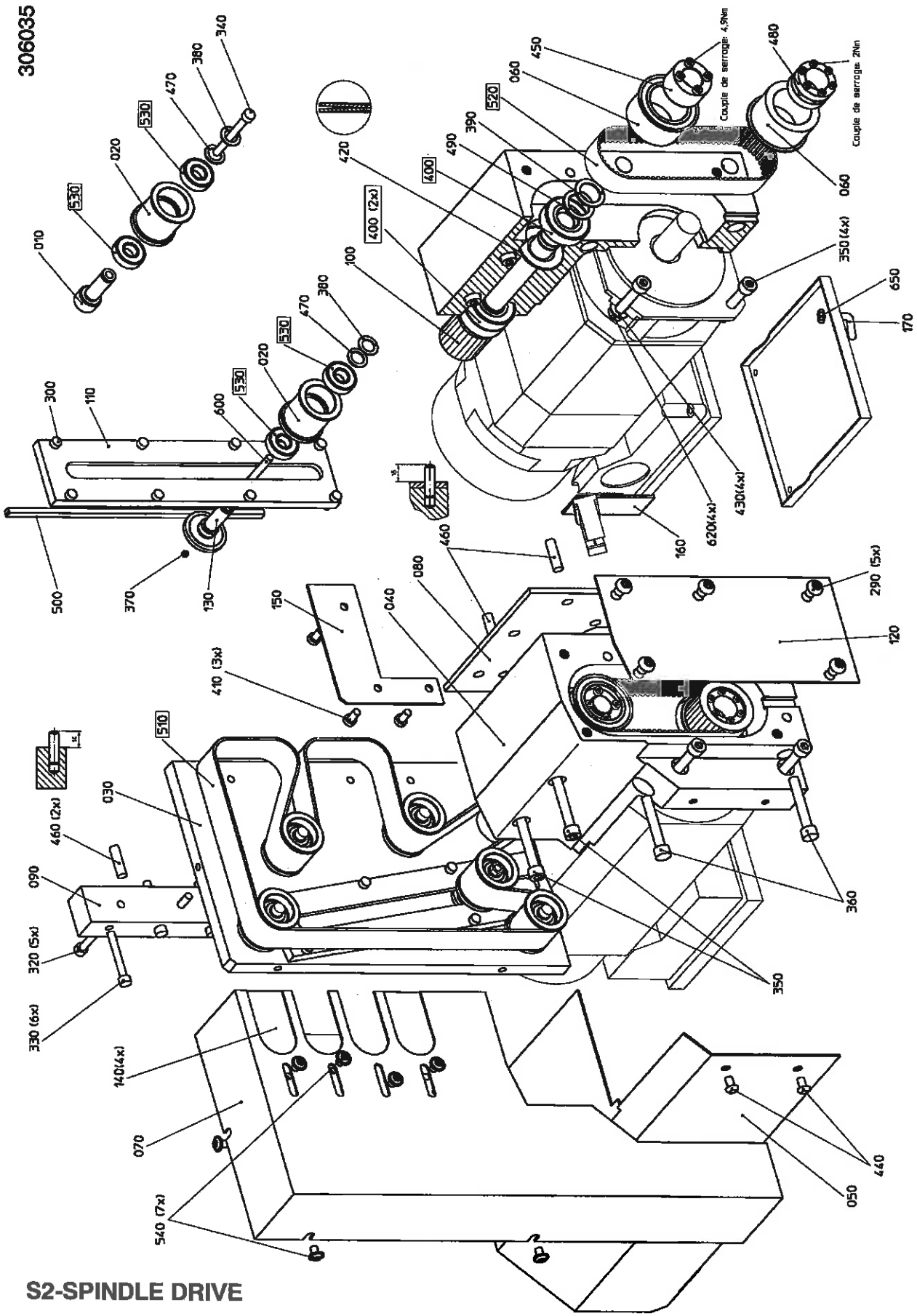

S2-SPINDLE DRIVE

S2 CHARACTERISTICS at 0 – 8000 rpm

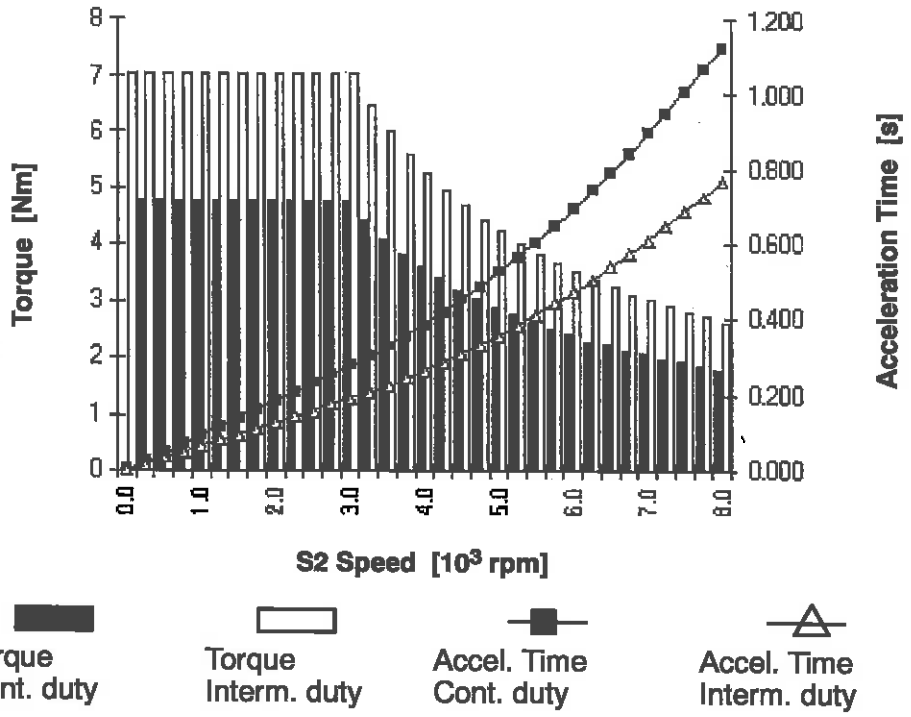

CHANGING GANG TOOLHOLDER

To start with : Put the machine in SETTING mode.

What to do ?	How ? What for ? Notes
Dismounting	
• Take down Splash Guard 070 ...	... by unscrewing three screws.
• Shift the expanding roller to relax the belt ...	... but first loosen the expanding roller screw and unscrew Axis 130.
• Unscrew the fastening screws of the toolholder.	
• Take down the toolholder	
Mounting	
• Fit in another toolholder ...	... set in place by the two locating pins.
• Screw in and tighten its fastening screws.	
• Fit the belt on the drive pulleys.	See Gang Tooling Drive Belt Layout, opposite page.
• Tension the belt ...	... by shifting the toothed expanding roller, see Para. 2.2.4.
• Open / close Protective Shutters 140:	acc. to live / stationary tool change.
• Mount and fasten Guard 070 ...	... with three Fastening Screws 540.
• Adjust and lock Protective Shutters 140.	

4. FRONTWORK UNIT (306348)

4.1 COMPOUND FRONTWORK UNIT SLIDE (306300)

Components :

1000 X3 carriage
1010 Z3 carriage
1020 X3 ballscrew
1030 Z3 ballscrew

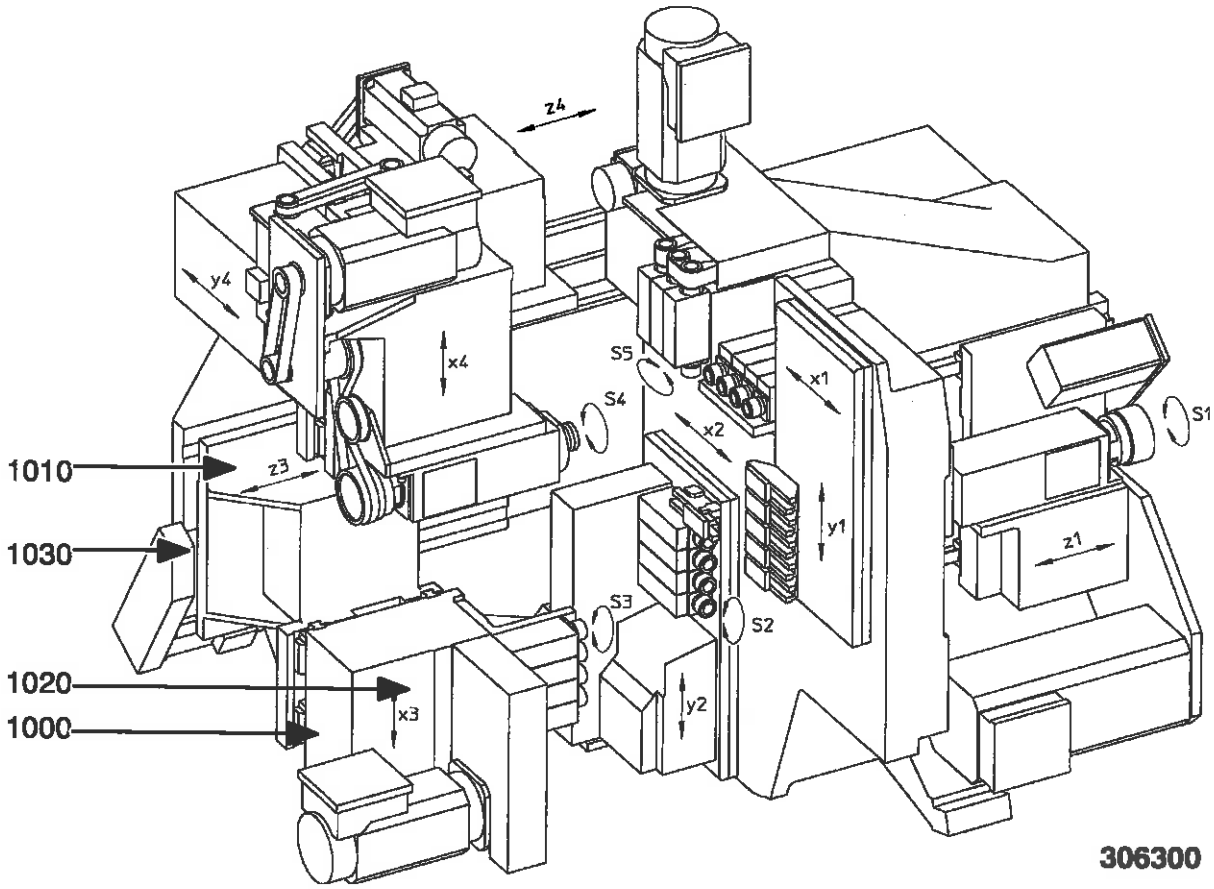

APPLICATION OF COMPOUNG FRONTWORK UNIT SLIDE

- 20 mm-DECO 0002
- 20 mm-DECO 0004

Compound Frontwork Unit Slide is of modular design.

MANUAL GREASING OF ROLLERGUIDES AND BALLSCREWS	
Greasing interval :	Grease rollerguides and ballscrews semi-annually or at least every 1000 hours' operation.
What to do ?	How ? What for ? Notes
• Pump the grease in through five Nipples each axis.	4 roller-recirculation slide-blocks and ballscrew Manual Greasing ..., see Para. 2.2.1. X3-Z3 Ballscrew (306047) Characteristics, see Para. 3.3.1.

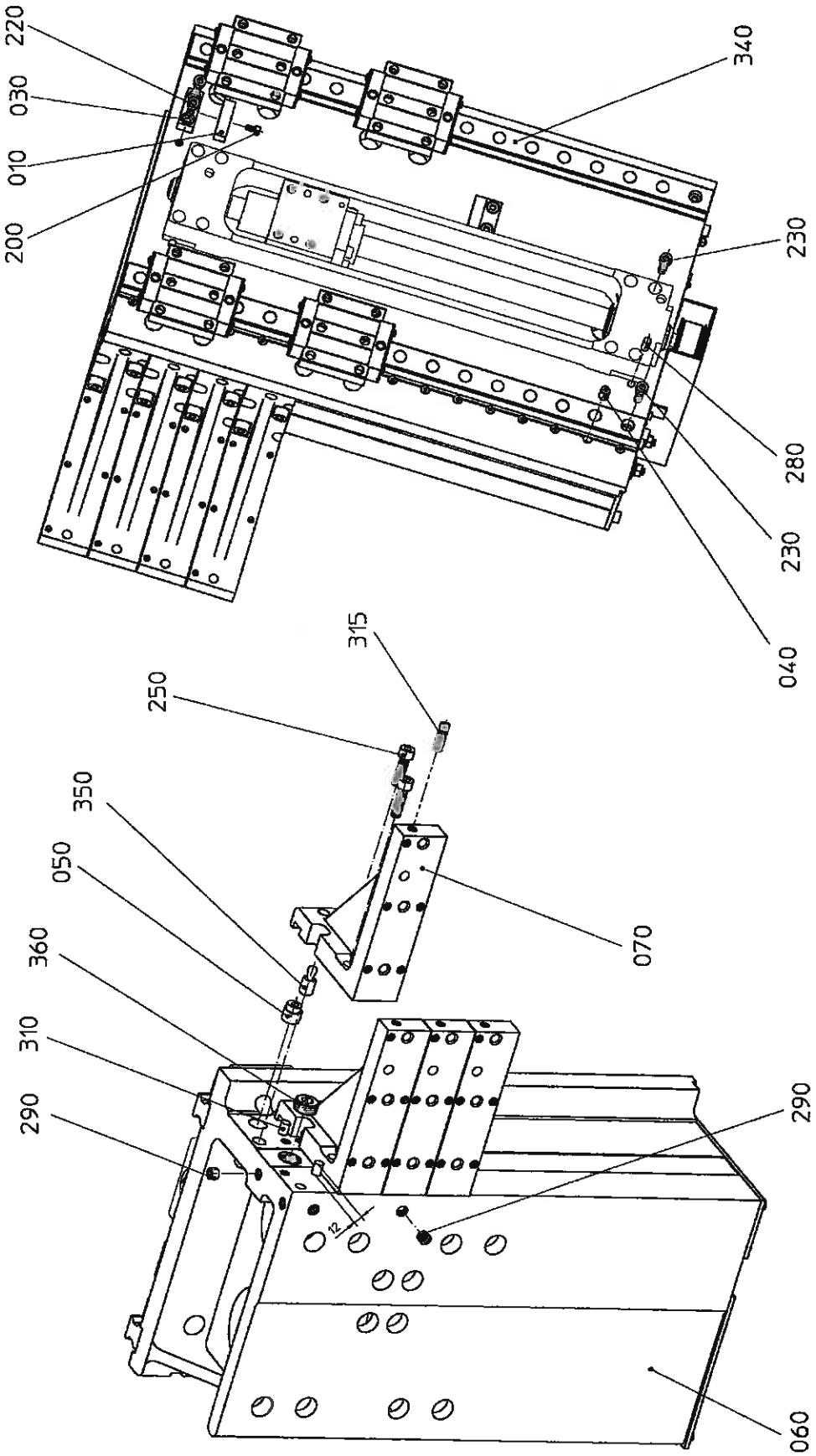
220
030
010
200
340
230
280
230
040
315
250
350
050
360
310
290
070
290
060
12

306008

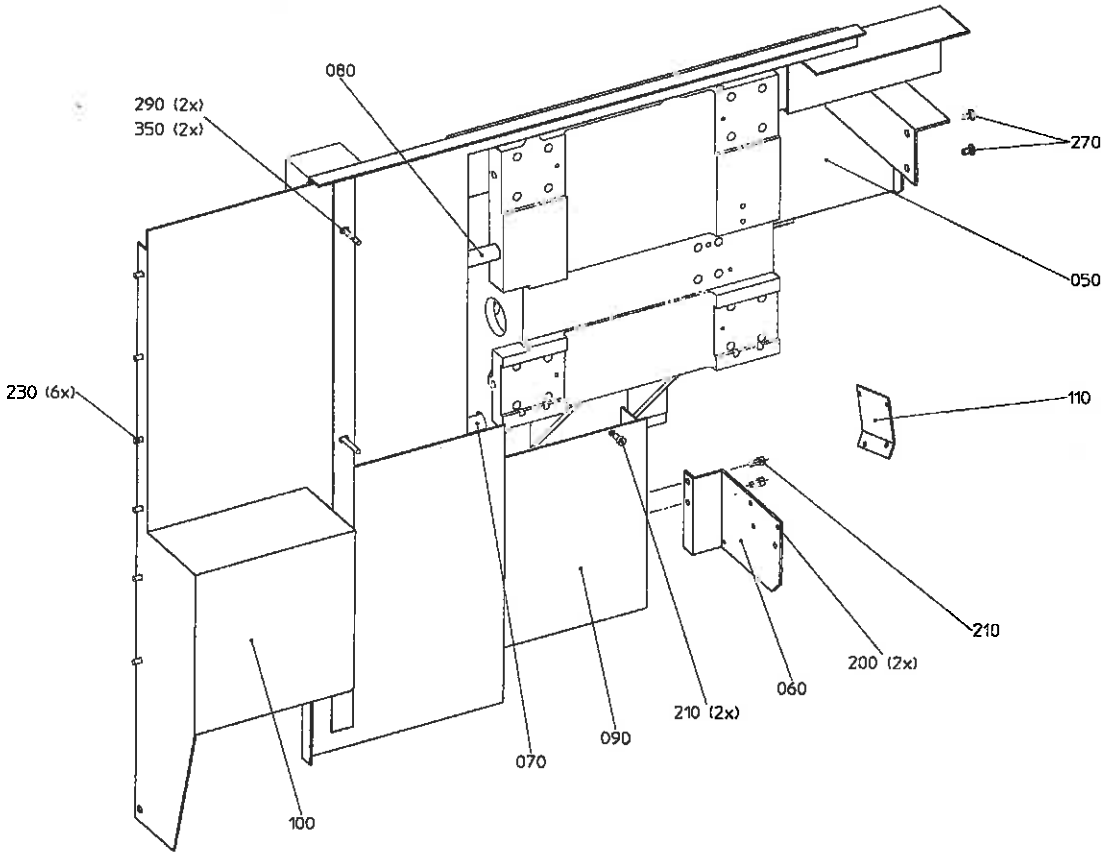
080
290 (2x)
350 (2x)
270
050
230 (6x)
110
210
200 (2x)
060
210 (2x)
090
070
100

306056

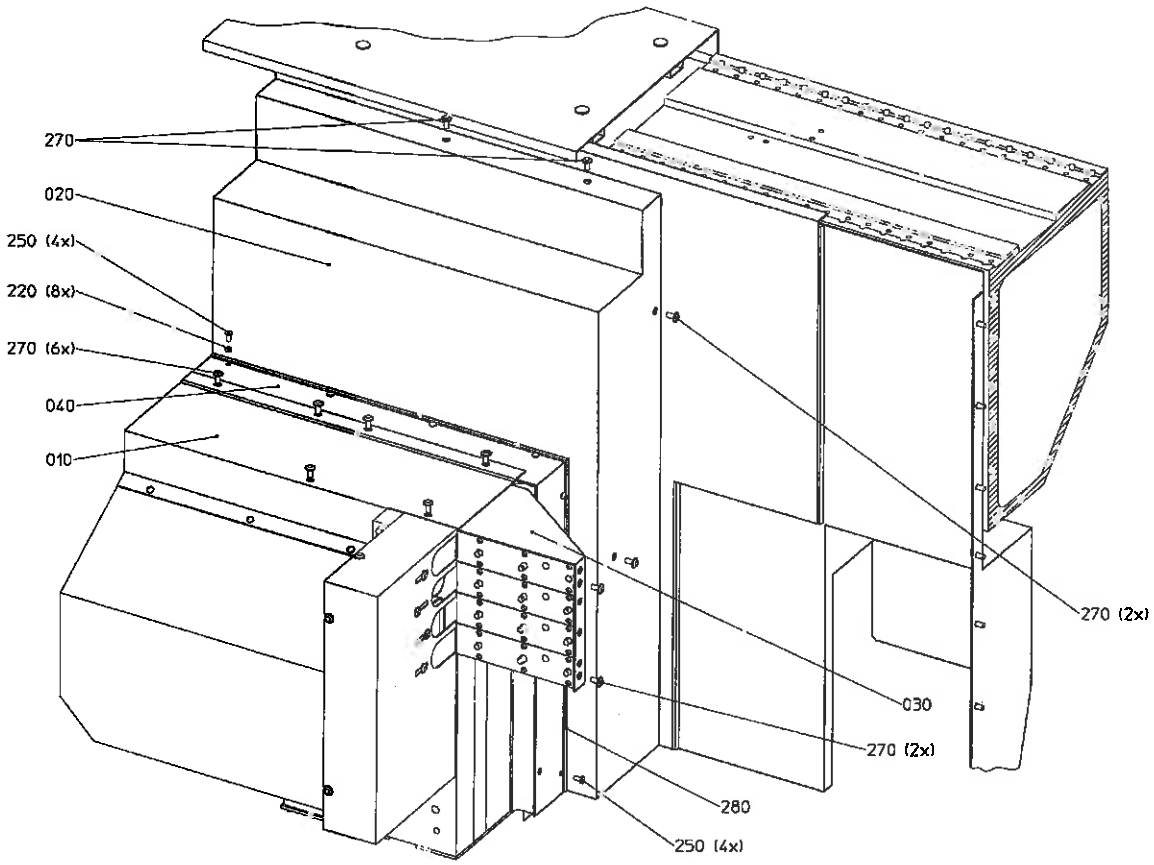
270
020
250 (4x)
220 (8x)
270 (6x)
040
010
270 (2x)
030
270 (2x)
280
250 (4x)

4.1.3 658 MM-GUIDE (306049)

658MM-GUIDE APPLICATION

- Compound Slide For Frontwork Unit (306300) see Para. 4.1
- Compound Pickoff-Headstock Slide (306301) see Para. 5.1

The guide is of modular design.

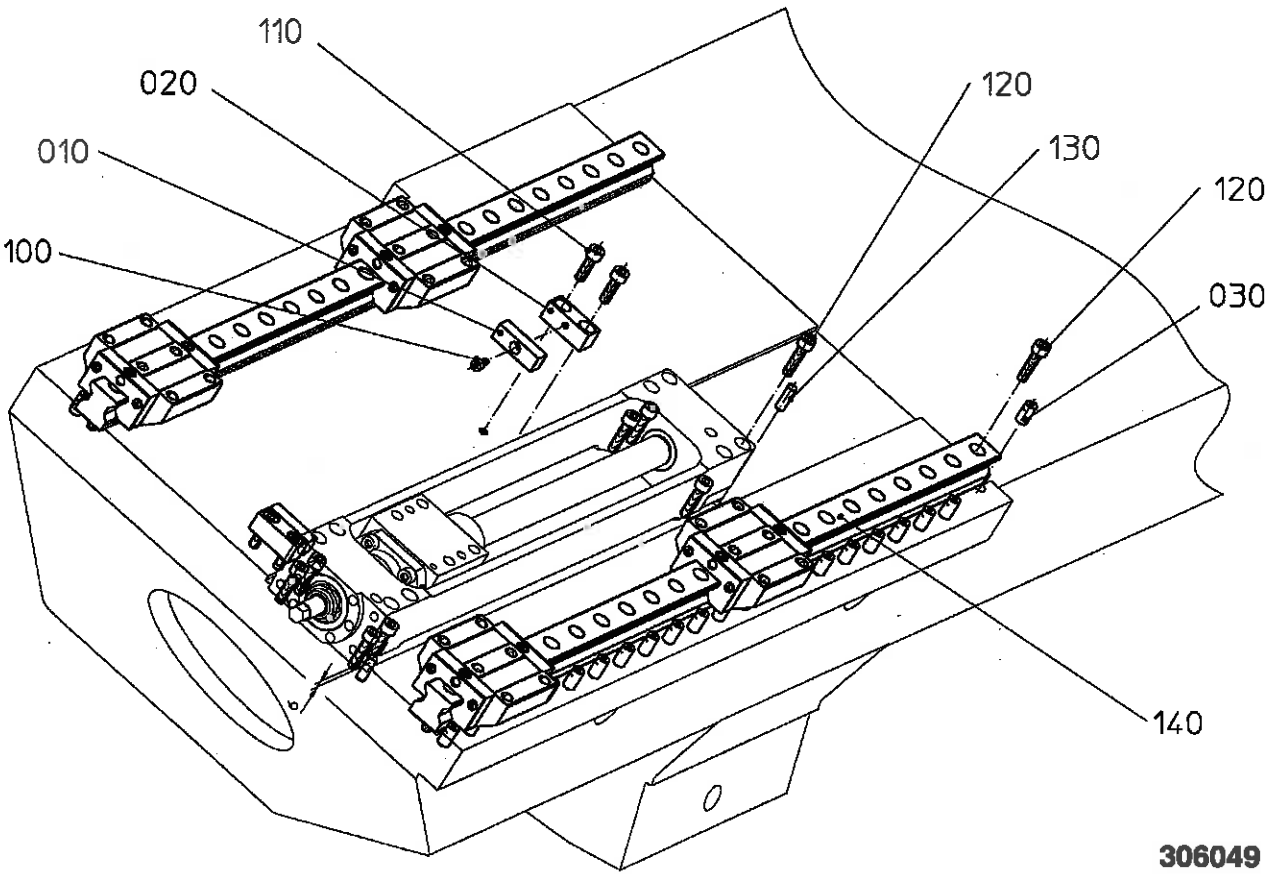

5. INDEPENDENT PICKOFF SPINDLE (306347)

5.1 COMPOUND PICKOFF-HEADSTOCK SLIDE (306301)

Components :

1000 X4-carriage
1010 Y4-carriage
1020 Z4-carriage

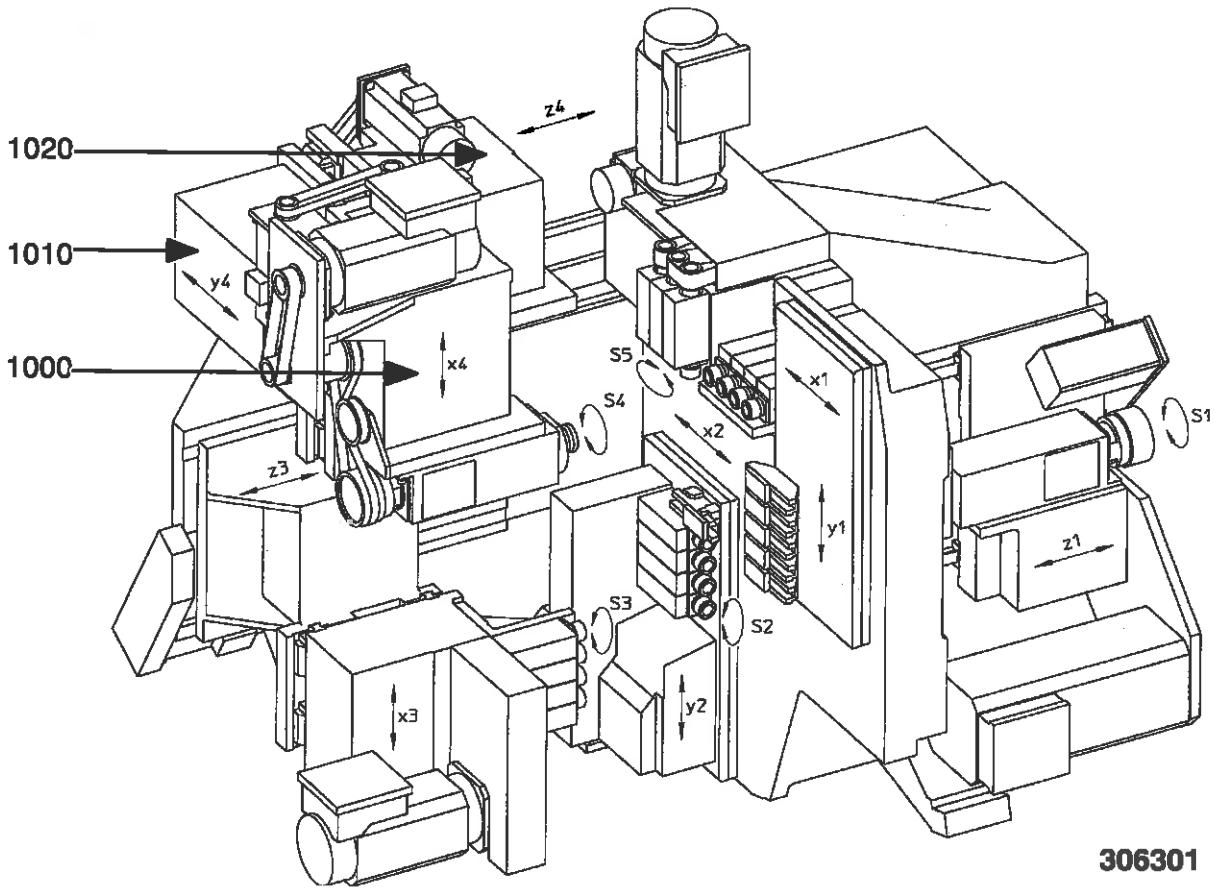

APPLICATION OF COMPOUND PICKOFF-HEADSTOCK SLIDE

- 20 mm-DECO 0002
- 20 mm-DECO 0004

Compound Pickoff-Headstock Slide is of modular design.

MANUAL GREASING OF ROLLERGUIDES AND BALLSCREWS	
Maintenance Interval :	Grease rollerguides and ballscrews semi-annually or at least every 1000 hours' operation.
What to do ?	How ? What for ? Notes
• Pump the grease in through five Nipples each axis (X4, Y4 and Z4).	4 roller-recirculation slide-blocks and ballscrew Manual Greasing ..., see Para. 2.2.1.

EQUIPMENT FOR STANDARD MACHINE

To be selected as required :

- Powered Pickoff Spindle (306302), see Para. 5.2.

X4-AXIS CHARACTERISTICS

• Traversing rate	max.:	20 m/min
• Axis travel	max.:	316 mm

X4 CARRIAGE OPERATION

• Axis guiding :	by 4 sliding blocks (with linear preloaded roller-recirculation bearings) on guiderails
• Feed motion :	via ballscrew
• Thermal effect prevention :	Ballscrew expanded between its bearings
• Carriage functions as support for :	◇ Pickoff spindle fitting ◇ Baseplate fitting for DECO 0003 features

TRAVEL LIMITS FOR CONFLICTING GEOMETRICS

- Check each tool for conflicting geometrics if several tool systems are used simultaneously.

  The rule given below specifies conflicting geometrics in operation for the machine with the standard equipment :
  (See also Chapter 2: TOOL GEOMETRICS, Instructions 300402: PROGRAMMING)

PICKOFF SPINDLE and FRONTWORK GANG with CONFLICTING GEOMETRICS

Y4-axis cannot be used below the part pickoff point (X4) :

If $X4 < 225$ when $Y4=0$ ($\pm 0,5$) X4 → Z3 axes are in conflict.

The pickoff spindle and the frontwork gang must not cross in X :

If $X4 - X3 > 84$ X4 → X3 axes are in conflict.

PICKOFF SPINDLE and BACKWORK GANG with CONFLICTING GEOMETRICS

The pickoff spindle and the backwork gang must not cross by more than 40 mm :

If $X4 > 170$ (1185+35+50) when $Z4 > 60$ and

if $X4 > 271$ when $Z4 > 100$ there is a conflict.

5.1.3 PICKOFF HEADSTOCK Z4-CARRIAGE (306013)

Components :

010 Z4 carriage

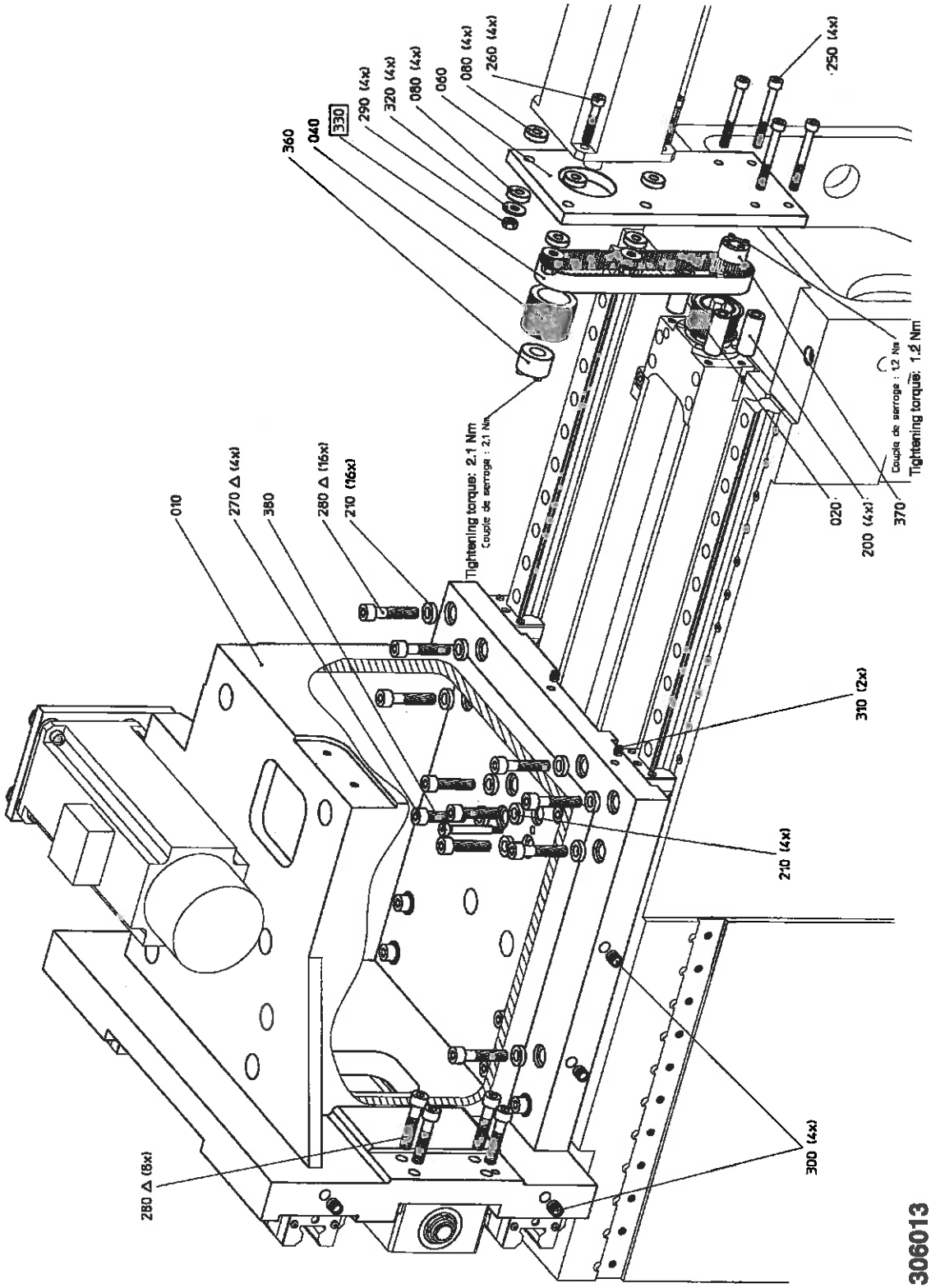

Z4 CARRIAGE OPERATION

- Axis guiding : by 4 sliding blocks (with linear preloaded roller-recirculation bearings) on guiderails
- Feed motion : via ballscrew coupled with motors over timing belt

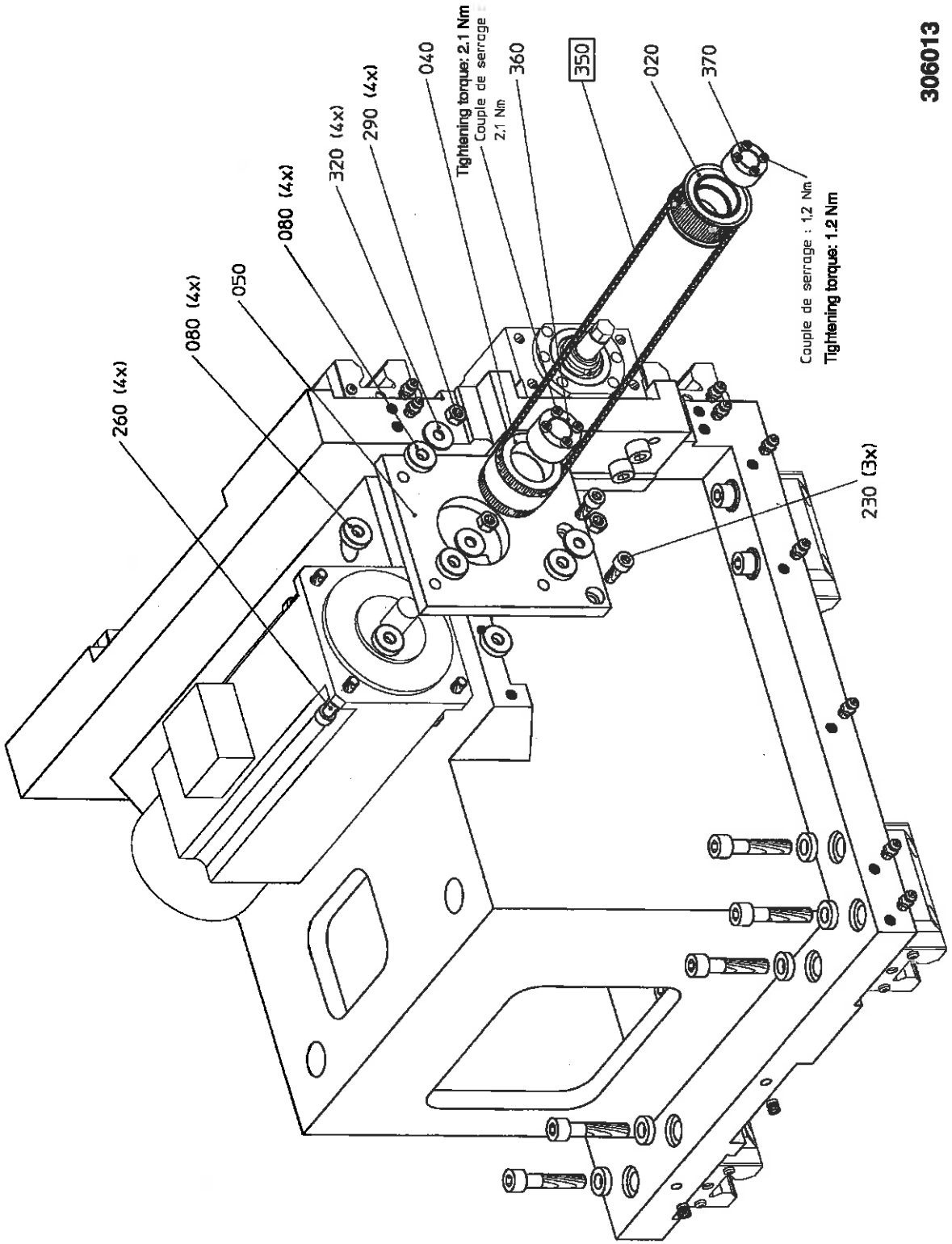

5.2.2 PICKOFF-SPINDLE DRIVE UNIT (306014)

Components :

060 Expanding roller plate

310 Spindle timing-belt

330 Motor timing-belt

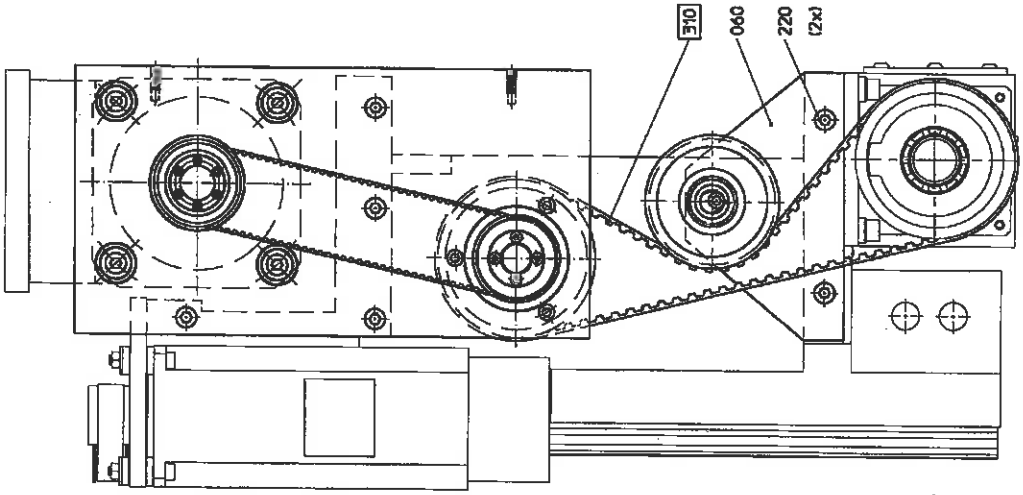

306014

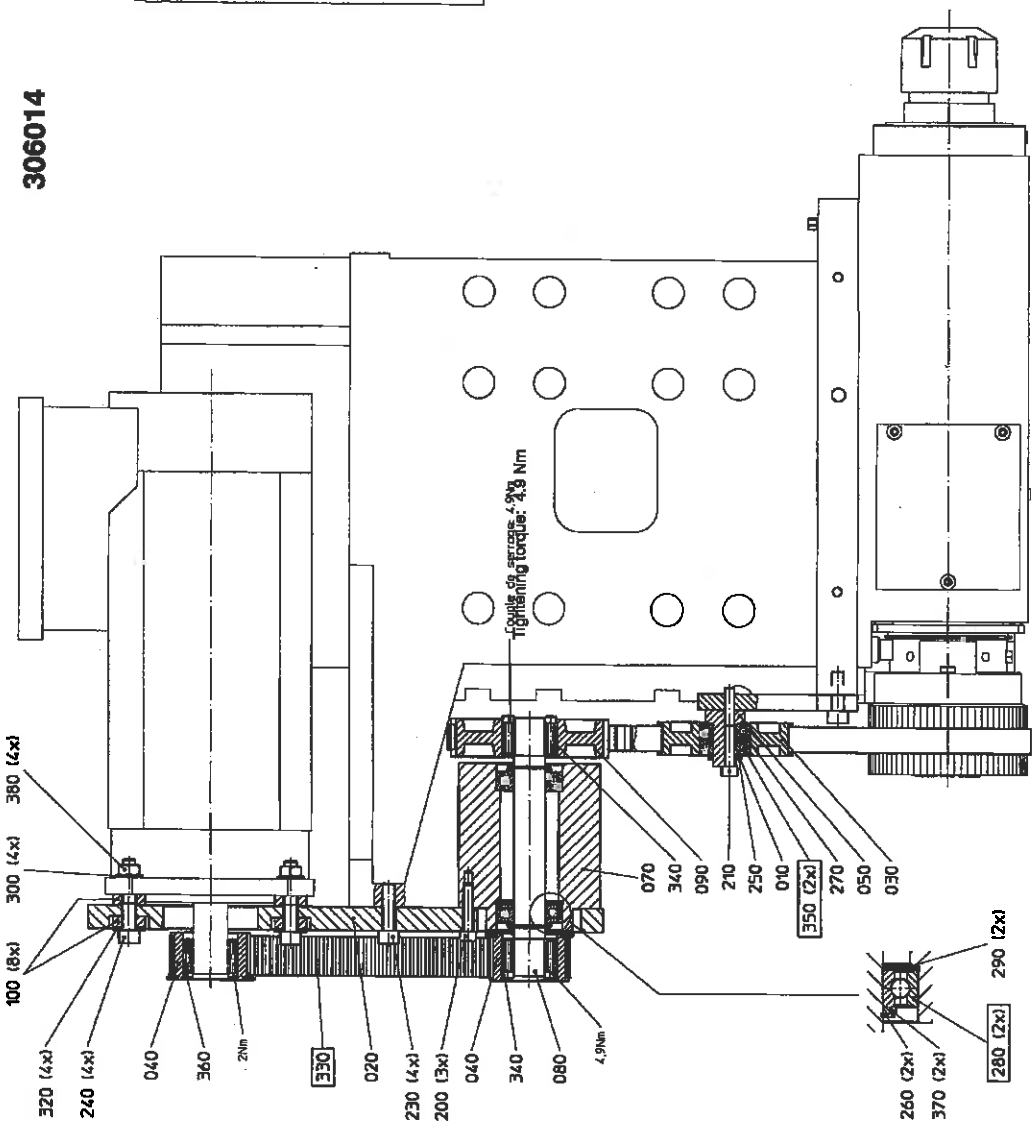

5.3 PART DISPOSAL MANIPULATOR (306017)

Components :

250 Carriage
260 Intermediate carriage
070 Stationary arm
080 Sliding arm
140 Screw
150 Nut
510 Gripper stop
590 Gripper
630 Thrustor to advance arm toward guidebush
640 Thrustor to advance arm toward machining zone
650 Gripper selection thrustor
670 Guiding shaft

Part presence sensor :

340 Cam
350 Sensor support

Disposal stop :

030 Disposal sleeve
335 Flange
463 Hex. head screw M8 x 12
870 Shock absorber

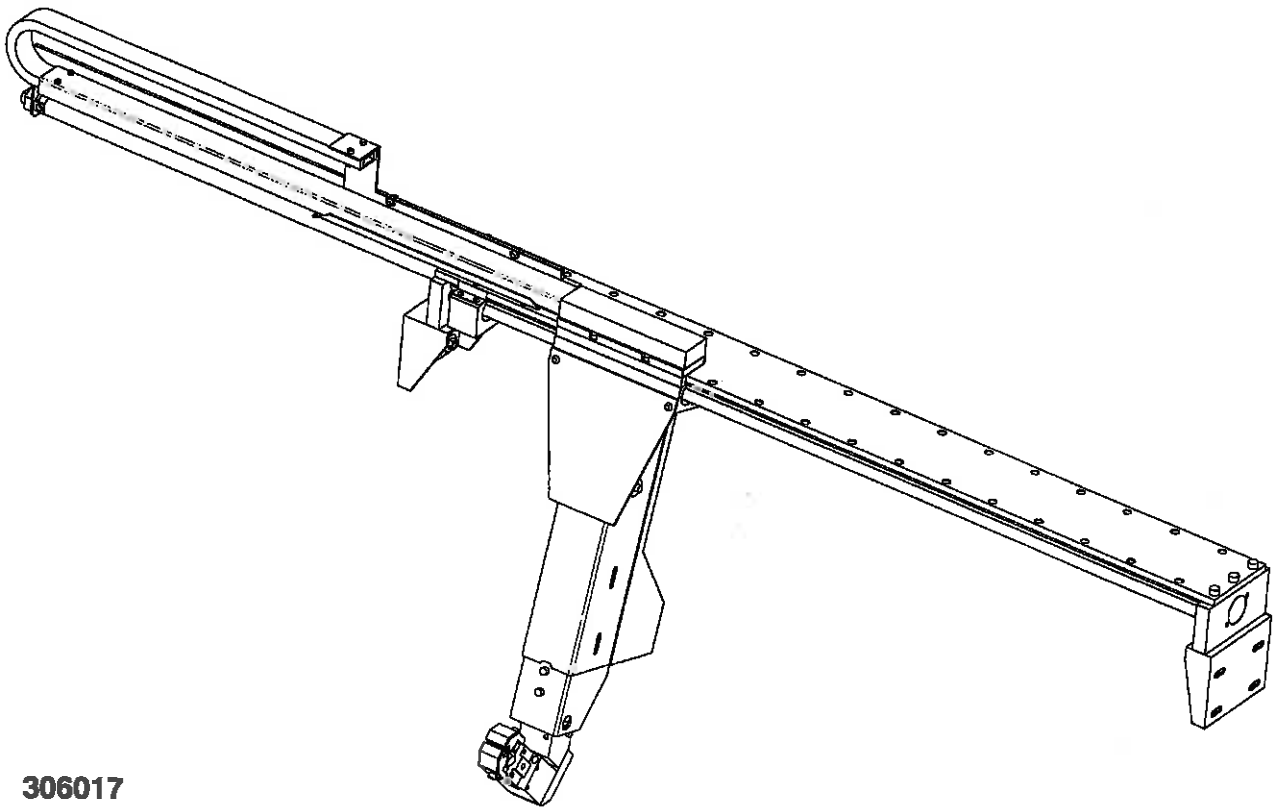

306017

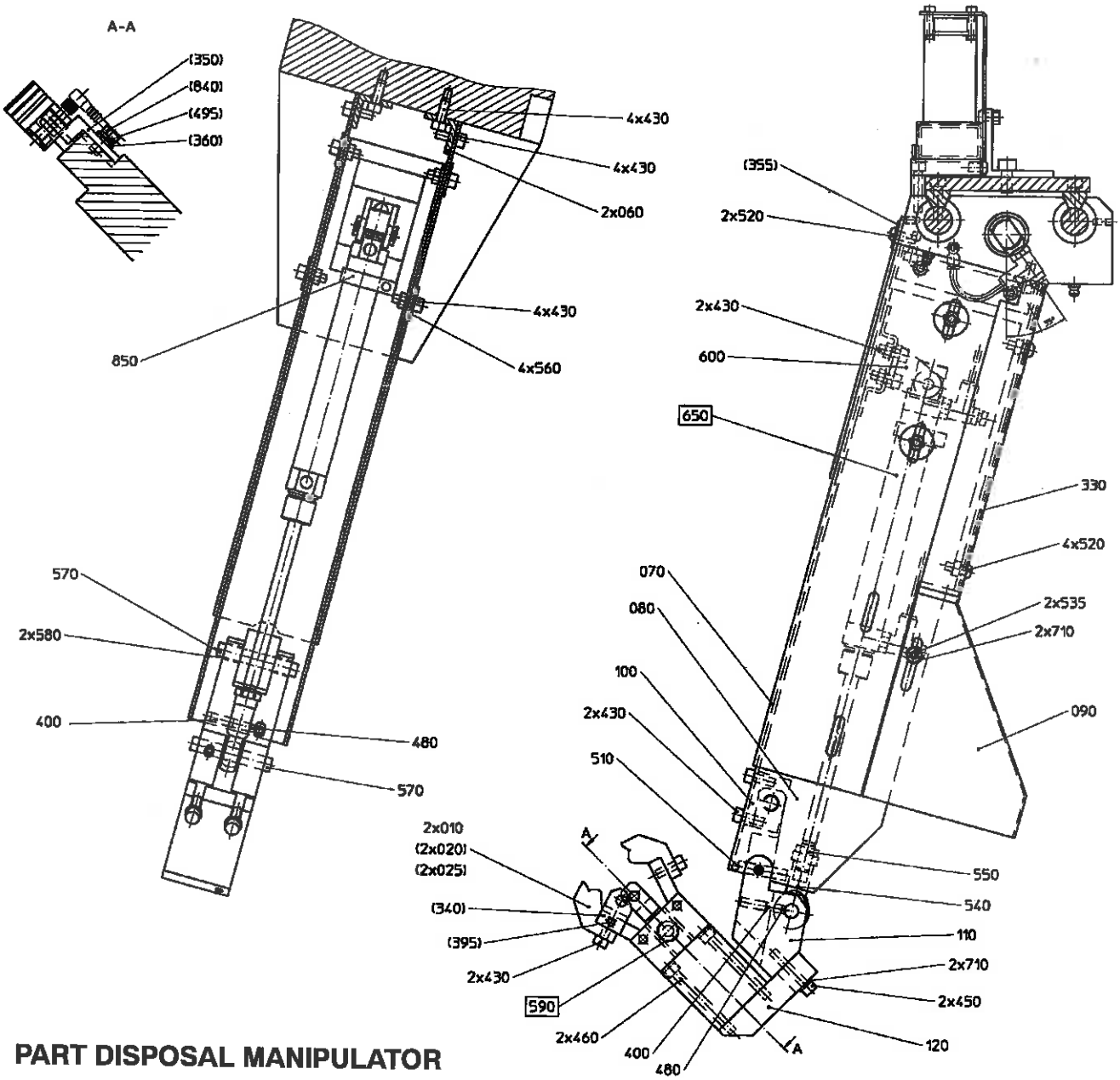

PART DISPOSAL MANIPULATOR

◆ SAFETY

Attention ! If incorrectly operated, Part Disposal Manipulator can be damaged or destroyed as a result of conflicting geometrics.

MANIPULATOR DESCRIPTION

Part Disposal Manipulator removes parts of up to 200 mm length from the pickoff spindle and the guidebush.

With the basic version we supply jaws enabling removal of parts of diameters of 8 to 32mm.

SETTING GRIPPER POSITION for Part-Disposal Manipulator

What to do ?	How ? What for ? Notes
Setting Upper / Lower Position • Unscrew and remove four Screws 430 with four Washers 560 from the sliding arm. • Set the sliding arm in position. • Screw in and tighten four Screws 430 with four Washers 560 from the sliding arm.	**Note :** The upper position is for the removal from the pickoff spindle, the lower one from the guidebush.
Setting Gripper-Selection Position • Select the gripper. • Adjust gripper position laterally with Gripper Stop Screw 400 ... • Adjust the arm in its upper position ...	 Gripper open. ... but first loosen Screw 400. ... if required. See above.
Setting Longitudinal Position • Loosen Nut 550. • Set the longitudinal position with Screw 140. • Screw on and tighten Nut 550.	 Setting range: 30 mm

MANIPULATOR GRIPPER SPECIFICATION

Ident. No.	Designation		Type	No.
	Item	Capacity / Length [mm]		
477680	Jaw	∅ 8 – 15	Standard	2
477681	Jaw	∅ 15 – 26	Standard	2
572803	Tray	100	Option 4110	1
572804	Tray	100	Option 4110	1
572805	Tray	135	Option 4111	1
572806	Tray	135	Option 4111	1
572807	Tray	180	Option 4112	1
572808	Tray	180	Option 4112	1

5.3.2 MANIPULATOR PNEUMATICS (306018)

Components :

010 Electro-distributor

030 Air-supply regulators

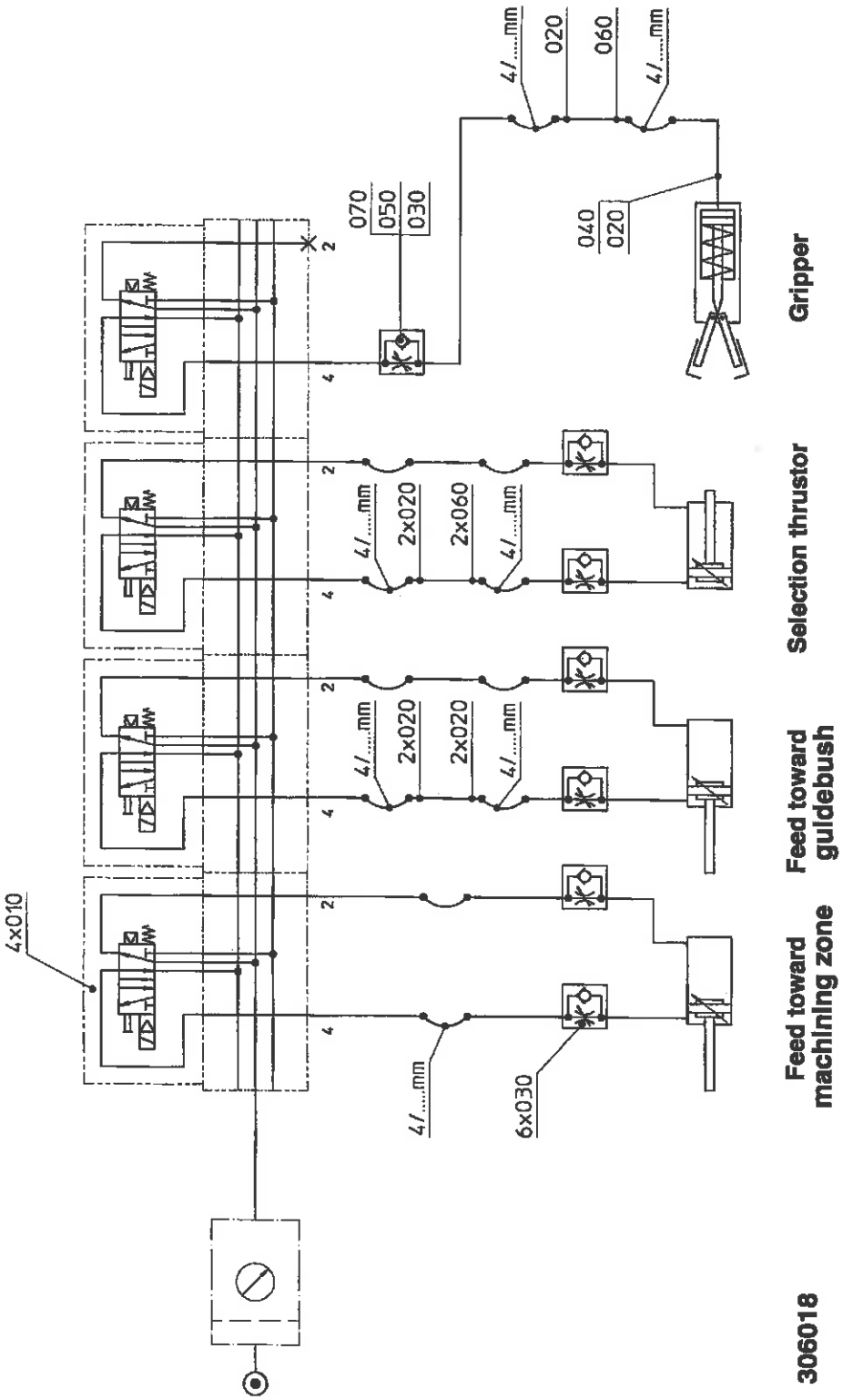

6. PNEUMATICS & COOLANT

6.1 STANDARD PNEUMATICS (306021)

Components :

100 Quick coupling G ¼"

180 Air stop electrovalve

190 Refill valve

170 Filter - pressure reducer unit with automatic condensation drain valve :

- 1010 Knurled button for operating pressure adjustment
- 1020 Manometer of filter - pressure reducer unit
- 1030 Trough of filter - pressure reducer unit
- 1040 Cartridge
- 210 Mano-contact

300 Electro-distributor YV1 of spindle

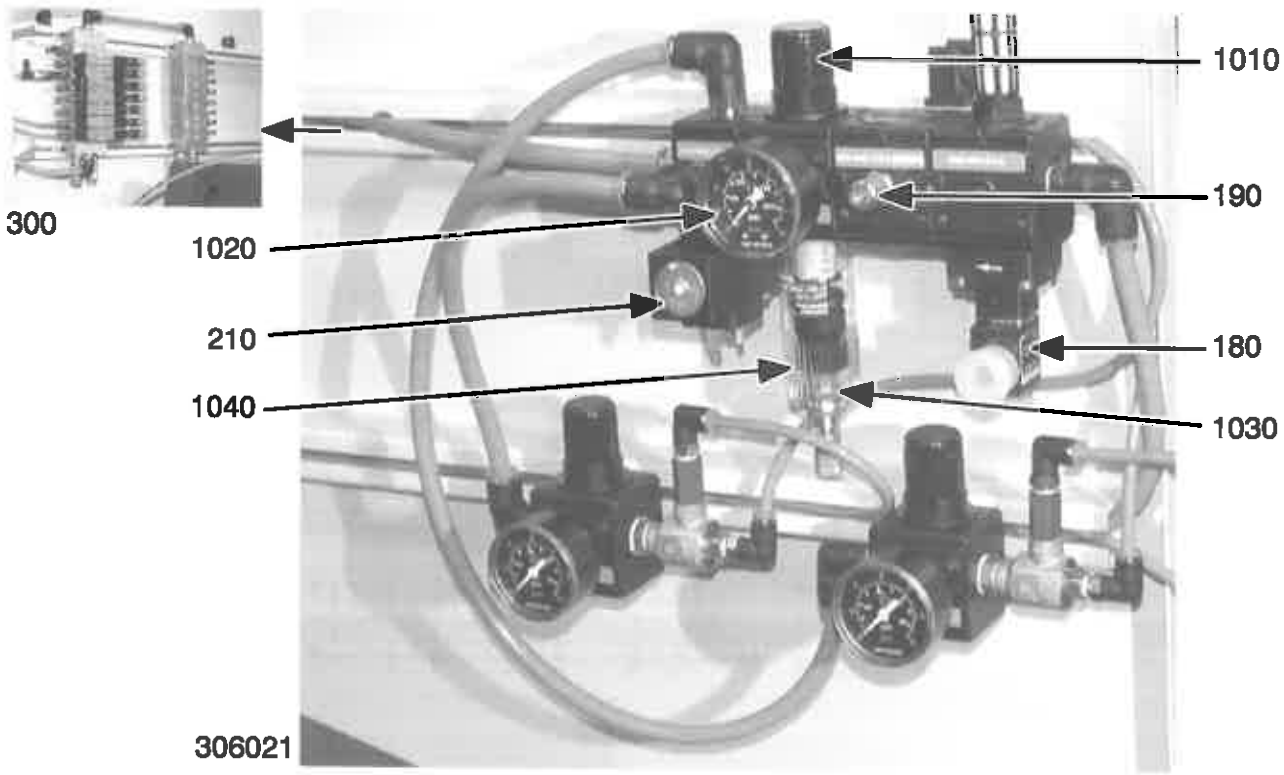

EQUIPMENT

To be selected as required :

- Pickoff Spindle Pneumatics — see Para. 6.4.1
- Manipulator Pneumatics — see Para 5.3.2.
- Optional Chucking Force System — see Para. 3.5.

◆ SAFETY

Attention ! The air supplied to the machine must be absolutely dry and oil-free.

Fit an air drier at the circuit input following the water/oil content in the air system, to avoid malfunctioning or breakdowns of the machine.

STANDARD PNEUMATICS DATA

• Operating pressure :		6 bar
• Air consumption	average :	5 m^3n/h
• Quick coupling	Supply :	G ¼″
	Gun	G ¼″

STANDARD PNEUMATICS OPERATION

• Application :	Drive and control of actuators (mainly thrustors)
• Air treatment :	by an air condition unit at the machine input acc. to its application: pressure, filtering.
• Refill valve :	for progressive pressurizing of machine systems in operation.
• Pressure adjustment :	with the screw of Refill valve 190
• Air leak under nipple :	If any, this is no defect but a bad adjustment of Screw 1050.
• Air stop electrovalve :	lets off all pneumatic energy when the machine is turned off.
• Thrustor control :	over electrovalve

6.2 COOLANT PUMP (306023)

COOLANT PUMP CHARACTERISTICS

- Pump output, infinitely variable : 9 to 59 l/min
- Motor power rating : 1.1 kW
- Amplifier power rating : 1.5 kW

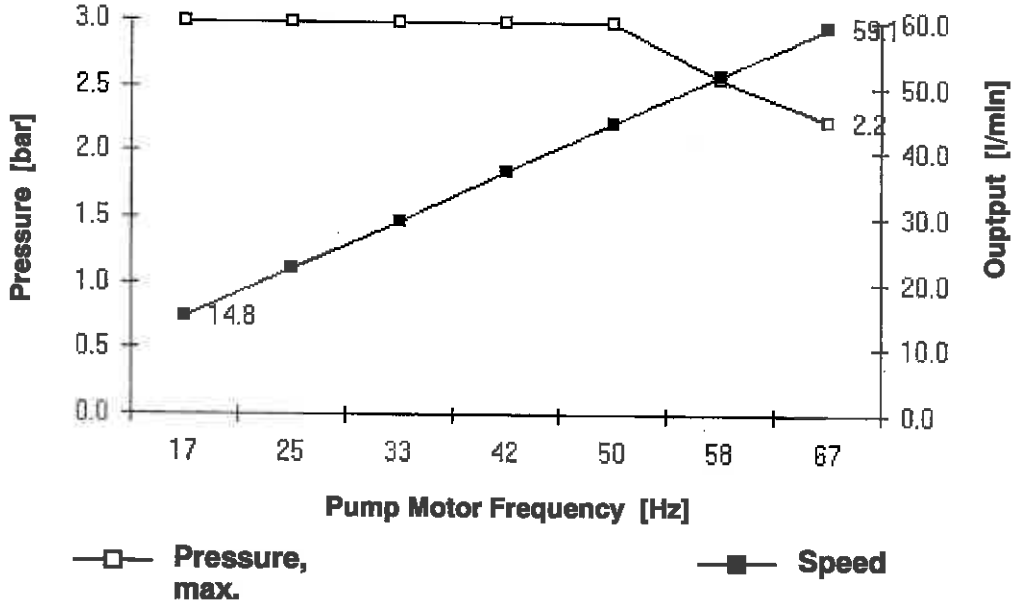

COOLANT PUMP OPERATION

- Coolant filtering : Pump-motor unit sucks the coolant through strainer.
- Coolant output adjustment : over pump motor frequency override which controls pump speed
- Circuit pressure : depends on circuit resistance :
  With all valves closed, pressure grows,
  With all valves opened, pressure drops.

Note : Make sure that the pump is not overloaded when the coolant system operates at its 100% capacity. The alarm lamp will flash on overloading the pump.

CLEANING SUCTION FILTER for Coolant Pump **Maintenance Interval :** Clean the suction filter semi-annually or every 1000 hours' operation.	
What to do ?	How ? What for ? Notes
Cleaning • Take out the suction filter from the tank. • Remove the four cover fastening screws. • Clean the components. • Reassemble the filter. • Put the filter back into the tank.	

Components :

010 Tube

150 Flowrate sensor

160 Banjo elbow

COOLANT SYSTEM OPERATION

Coolant passes through Flowrate Sensor 150 and flows to Banjo Elbow 160 and then through a rigid pipe onto the guidebush.

The X1/Y1 and X2/Y2 gang tools are lubricated from two pipes over a regulated injector.

- See also : Para. 6.2, Coolant Pump.

CLEANING COOLANT FLOWRATE SENSOR	
Maintenance interval :	Clean the coolant flowrate sensor semi-annually or every 1000 hours' operation.
What to do ?	How ? What for ? Notes
Dismounting / Cleaning / Mounting • Undo and remove Nut 8. • Take out Vane 3. • Clean the components. • Remount the whole lot.	

COOLANT FLOWRATE SENSOR

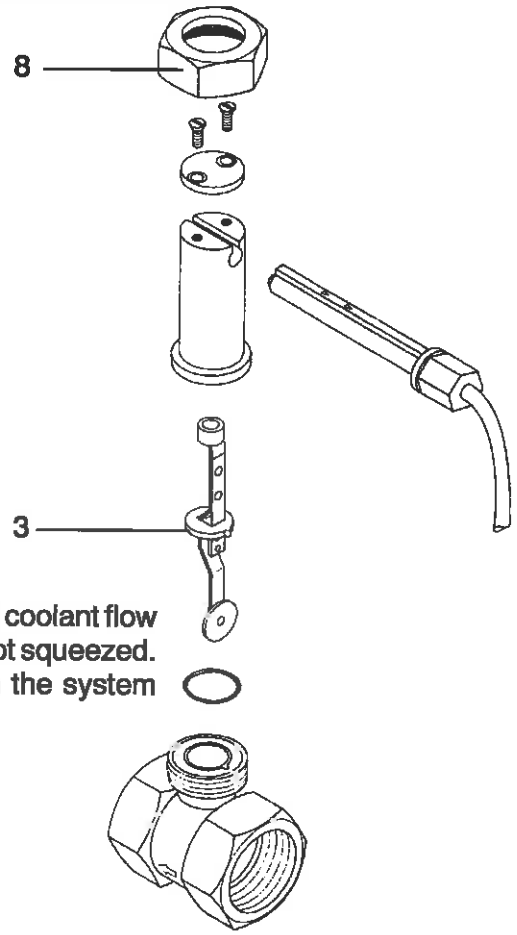

◆ **SAFETY**

Attention ! Make absolutely sure that the main coolant flow opening (at the oil tank output) is not squeezed. This might cause overpressure in the system and overload the pump motor.

7. MACHINE EQUIPMENT

7.1 CHIP PAN (306034)

Components :

1010 Chip pan

1020 Splash guard

1030 Outside guard

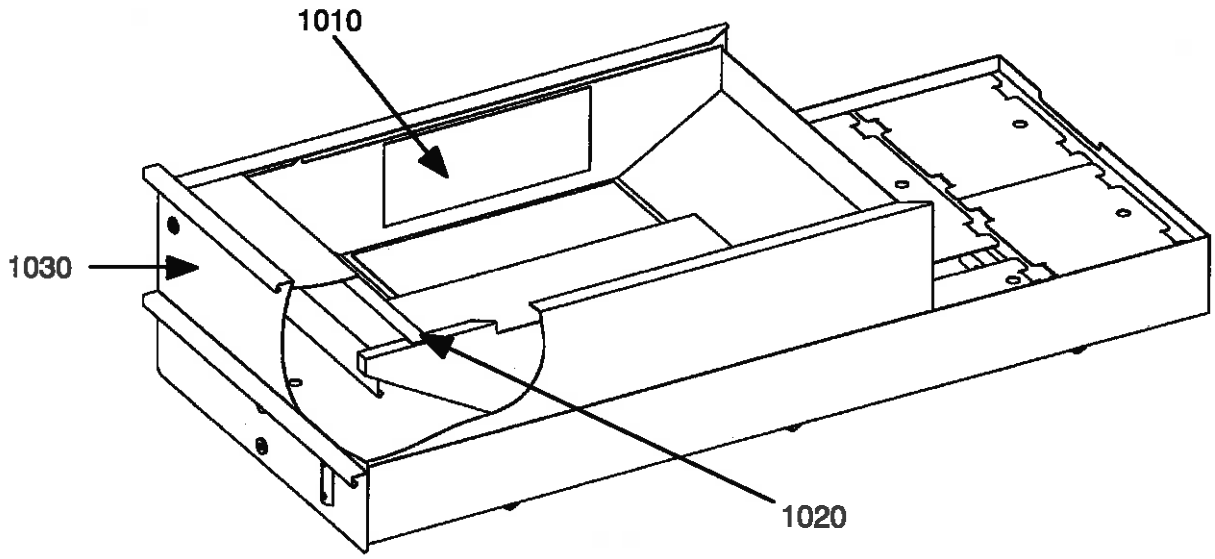

Attention ! Do not operate the machine unless Guards 1020 and 1030 are in place.

CHIP PAN DATA

- Volume : approx. 130 l

EMPTYING CHIP PAN	
To start with : Stop machining.	
What to do ?	How ? What for ? Notes
Dismounting • Remove Guard 1030. • Pull the chip pan backward. • Take down Splash Guard 1020.	The rollers will be blocked by the oil tank.
Emptying • Brush the swarf out of the pan.	
Mounting • Remount Splash Guard 1020. • Fit the chip pan in position. • Position and fasten Guard 1030.	

CHECKING OIL LEVEL	
Maintenance Interval : Check cutting oil level daily.	
What to do ?	How ? What for ? Notes
Checking • Check visually the cutting oil level...	and fill up if required.

CHANGING CUTTING OIL	
Maintenance Interval :	Change cutting oil semi-annually or each 1000 hours' operation.
To start with :	Turn the machine off. Remove the chip pan.
Note :	Pull out partially the tank to drain the oil. The strainer rests suspended inside the machine. Pull out completely the empty tank to clean it.
What to do ?	How ? What for ? Notes
• Pull partially the tank out of the machine ...	... until rollers are blocked.
• Take off the tank cover.	
• Pull out and hang up the suction filter inside the machine ...	... to let the oil drop and then clean the filter.
• Drain the tank ...	
• Clean the tank ...	... thoroughly.
• Put back the whole lot.	... and fill up with fresh oil.

7.3 PARTS CONTAINER (305038)

PARTS CONTAINER DESCRIPTION

A set of 2 different plastic containers as receptacles for parts is available.

The user can easily adapt the containers to suit his/her specific requirements.

8. TOOLING FOR X1-Y1 & X2-Y2 GANGS

The toolholders described in this chapter can also be mounted on the backwork gang. You will find more details in the paragraphs below under the toolholder geometrics.

8.1 LEFT / RIGHT TOOLHOLDER (306033)

Components :

020	Removable reinforcement plate	100	Z-offset screws
030	Pressing claw	120	Toolholder fastening screws
050	Tool clamping screws	150	Bore for oil spout
		160	Spring

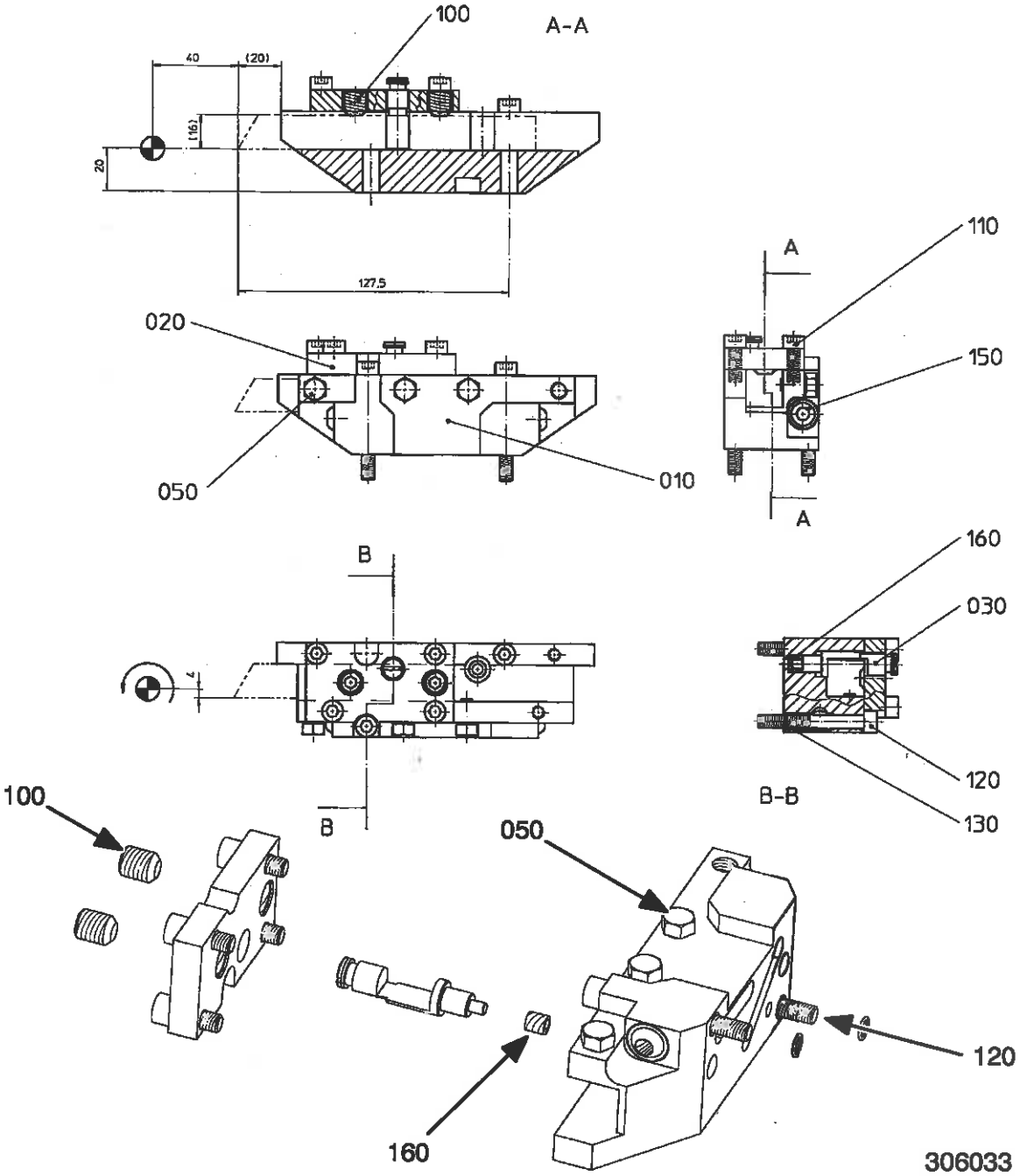

What to do ?	How ? What for ? Notes

CHANGING LEFT/RIGHT TOOLHOLDER

To start with : Set the machine in the reference position.

Dismounting	
• Unscrew both Fastening Screws 120.	
• Take down the toolholder.	
• Block the oil spout ...	... if required.
Mounting	
• Fit another toolholder ...	... set in place by the two locating pins.
• Screw in and tighten both Fastening Screws 120.	

CHANGING GANG TOOL
(left/right toolholder with reinforcement plate)

To start with : Set the machine in reference position.
Take down the toolholder.

Dismounting	
• Loosen three Clamping Screws 050.	
• Release the tool ...	... by pressing Claw 030.
• Remove the tool.	
Mounting	
• Hold down Claw 030 ...	... while setting the groove "horizontally".
• Fit in another tool.	
• Release Claw 030 ...	...to press the tool against Offset Screws 100.
• Screw in Clamping Screws 050 ...	... without play.
Adjusting	
• Adjust the tool position in X (and in Z if required) ...	... on the presetter.
• Tighten Clamping Screws 050.	

CHANGING GANG TOOL
(left/right toolholder without reinforcement plate)

Dismounting	
• Loosen three Clamping Screws 050.	
• Remove the tool.	
Mounting	
• Fit in another tool.	
• Tighten Clamping Screws 050.	

HIGH TOOLHOLDER APPLICATION

- 20 mm-DECO

  The toolholder is of modular design.

HIGH TOOLHOLDER DATA

• Number of tools :		1 to 10	
• Tool stations :	X1-Y1 Gang	T11 to T15	
	X2-Y2 Gang	T21 to T25	
• Capacity :	tool section	8 x 8 mm (left/right)	
• Z-offset (height) with reinforcement plate :		0 to 2 mm infinitely variable	
• **Geometrics :**			
X1-Y1 & X2-Y2 Gangs :		X1, X2	127.5 mm
		Y1, Y2	+4 or -4 mm
		Z1	24 mm
Cross Backwork Gang :		X4	127.5 mm
		Y4	+4 or -4 mm
		Z4	16 + 24 = 40 mm

HIGH TOOLHOLDER OPERATION

• Main use :	with 4mm-offset-insert tool; for left / right turning by reversing the toolholder
• Tool clamping :	with clamping screws, the tool protrusion off the holder being reduced to the minimum.
• Cutting oil supply :	bore available for oil spout

Operation without reinforcement plate :

• Tool removal on the machine :	for frequent tool grinding.
• Tool position in Z :	ensured by pressure on the tool against the bottom of the groove.

Operation with reinforcement plate :

• Use :	for heavy cutting
• Axial tool offset :	infinitely variable (e.g. for rouging, finishing, etc.)
• Tool position in Z :	The tool rests pressed with Claw 020 against the offset screws. It must not touch the bottom of the groove.

9. OPTIONAL GUIDEBUSHES

9.1 FIXED GUIDEBUSH (306043)

Components :

010	Notched nut	060	Pipe key
020	Key	070	Setting tool
030	Bush-holding collet	080	Guidebush sleeve
040	Collet sleeve	110	Pan head screw: M6 x 20
050	Tie	1010	Collet (of drawn-type guidebush)

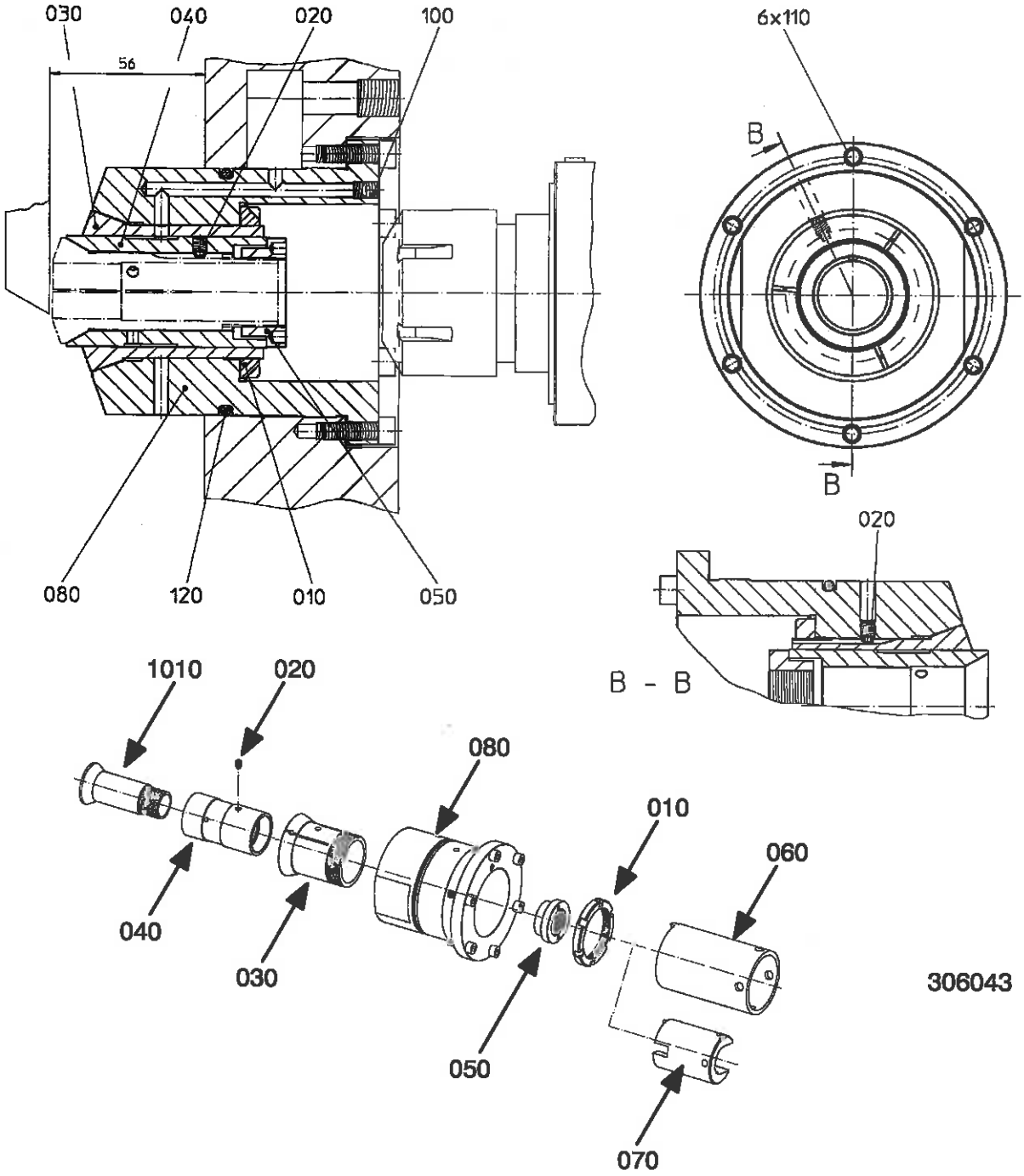

FIXED GUIDEBUSH OPERATION

- Bar guidance : precise and very close to the tool

What to do ?	How ? What for ? Notes
CHANGING BUSH-HOLDING COLLET	
To start with : Disengage Z1-axis into its rearmost position.	
Dismounting	
• Undo Nut 010 ...	... with Pipe Key 060.
• Pull out Bush-Holding Collet 030.	
Mounting	
• Grease another Bush-Holding Collet 030 and fit it in Sleeve 080.	• Align the collet keyway with Key 020.
• Screw on and tighten Nut 010 ...	... with Pipe Key 060.
CHANGING COLLET SLEEVE (GUIDEBUSH)	
To start with : Disengage Z1-axis into its rearmost position.	
Dismounting	
• Loosen Notched Nut 010 ...	... with Pipe Key 060.
• Pull out Collet Sleeve 040.	
Mounting	
• Fit another Collet Sleeve 040 inside Bush-Holding Collet 030 ...	... through the back of Collet 030.
	• Grease Guidebush Sleeve 080.
• Screw on and tighten Notched Nut 010 ...	... with Pipe Key 060.
CHANGING COLLET (without its sleeve)	
To start with : Disengage Z1-axis into its rearmost position.	
Dismounting	
• Undo and remove Tie 050.	• Use Setting Tool 070.
• Pull out Collet 1010.	
Mounting	
• Fit a new Collet 1010 inside its Sleeve 040.	• Grease the collet. • Align the collet keyway with Key 020.
• Fit and screw Tie 050.	

GUIDEBUSH COOLANT SYSTEM DATA

- Filter mesh size : 20 µm

INSTALLATION OF GUIDEBUSH COOLANT SYSTEM	
What to do ?	How ? What for ? Notes
Installation • Fit the filter on the NC cabinet and fasten it with two Screws 200 • Screw Joint 140 inside the tube. • Screw Joint 170 onto the vertical (support).	

GUIDEBUSH COOLANT SYSTEM OPERATION

- Regular lubrication : between guidebush collet and bar, for reduction of jamming risks
- Coolant flowrate : adjustable before filtration

CLEANING GUIDEBUSH COOLANT FILTER	
Maintenance Interval : Clean the guidebush coolant filter weekly or at least every 50 hours' operation.	
What to do ?	How ? What for ? Notes
• Take down the filter. • Clean or change the filter. • Fit the filter in place.	

◆ SAFETY

Attention ! Do not leave the cutting oil pipe in the vertical when using coolant-free guidbushes. Mishandling of the control valve can result in flooding the guidebush bearings.

See also Para. 3.8.1 VERTICAL (306005).

EQUIPMENT FOR LIVE GUIDEBUSHES

To be selected as required :

- Live Guidebush Drive (306027) see Para. 9.4
- Setting Tool 481452 see Fig. in Page 9.1/1

GENERAL CHARACTERISTICS OF LIVE GUIDEBUSH

- Speed : 0 - 10000 rpm
- 28mm outside-∅ collets (in guidebush) : Meister No. 1357
Neukomm 18.001
- Bar capacity : round 20 mm
hexagon 18 mm
square 15 mm
- Angular orientation : over guidebush drive
- Overall length : 145 mm
- Space requirement : 110 mm

LIVE GUIDEBUSH OPERATION

- Bar guidance : by drawback collet precise and very close to the tool
- Guidebush collet alignment : with a key
- Guidebush spindle support : two spring-preloaded oblique-contact high-precision bearings which are pregreased for life
- Drive : without backlash, over a timing belt

DISMOUNTING LIVE GUIDEBUSH

To start with : Remove the drive belt. (See Page 9.4/11)

What to do ?	How ? What for ? Notes
Dismounting • Unscrew and remove six Screws 250. • Take down the guidebush.	

9.4 LIVE GUIDEBUSH DRIVE (306027)

Components :

030 Guidebush-drive bearing housing
040 Linear movement bearing
050 Notched pulley
060 Spindle-drive bearing housing
090 Expanding roller
100 Notched pulley
120 Eccentric
420 Timing belt (main spindle)
450 Timing belt (guidebush)

306027

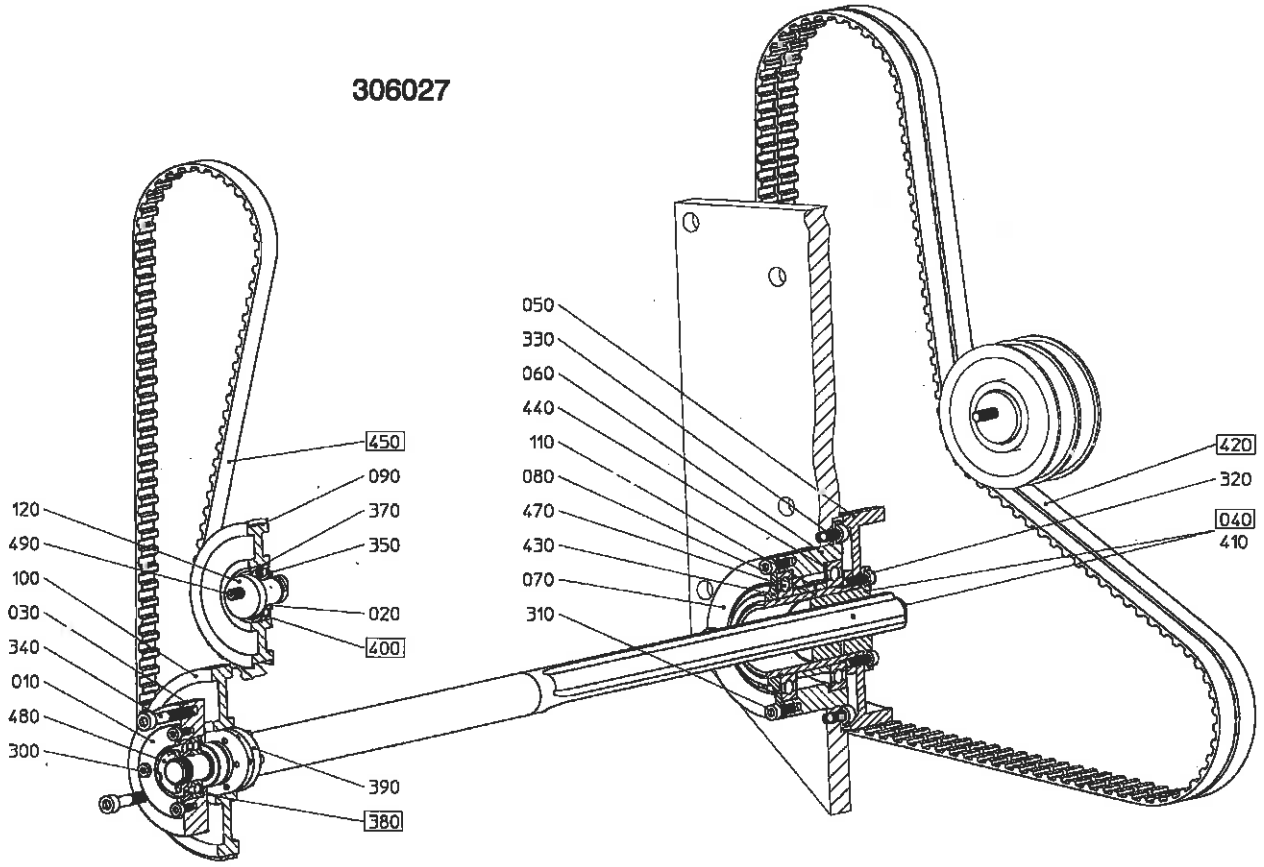

EQUIPMENT FOR GUIDEBUSH DRIVE

Special equipment :

- Grease Pump (305042), see Para. 2.1.2

GUIDEBUSH DRIVE DATA

- THK-linear-bearing shaft : LBF25 (Order Ref. Dwg 562057)
- Speed, max.: 8000 rpm
- Spindle - drive ratio : i = 1.25 : 1

What to do ?	How ? What for ? Notes

TENSIONING TIMING BELT	
Tensioning	
• Tension the belt with the expanding Roller.	See Tensioning Timing Belt, Para. 2.2.4.

ANGULAR ALIGNMENT OF HEADSTOCK SPINDLE AND GUIDEBUSH	
Alignment	
• Carry out the angular alignment with Pulley 100.	

MANUAL GREASING OF GUIDEBUSH DRIVE	
Maintenance Interval :	Grease the guidebush drive semi-annually or at least every 1000 hours' operation.
To start with :	Fill up the grease pump, see Para. 2.1.2
• Move the headstock carriage (Z1) into reference position ...	... so as to align the greasing holes of the drive shaft and the nut.
• Keep greasing through Nipple 270 ...	... until the grease comes out at the sides of the nut.

CHANGING GUIDEBUSH DRIVE BELT	
Dismounting	
• Loosen Screw 490 and pivot Eccentric 120.	
• Unscrew three Screws 340.	
• Shift backwards the shaft in Linear Bearing 040.	
• Remove Belt 450.	
Mounting	
• Pass another Belt 450 over Pulley 100.	
• Secure Drive Bearing Housing 030 with Screws 340.	
• Fit Belt 450 on the pulleys.	
• Tension Belt 450 ...	... by pivoting Eccentric 120.
• Tighten Screws 490.	

10. TOOLING & EQUIPMENT FOR BACKWORK UNIT

10.1 STATIONARY 25MM-ID TOOLHOLDER (306040)

Note : The toolholder described in this paragraph can also be mounted on other tool gangs. You will find more details in the paragraphs below under the toolholder geometrics.

Components :

020 Toolholder
100 Clamping screws
110 Fastening screw
130 Bore for oil spout

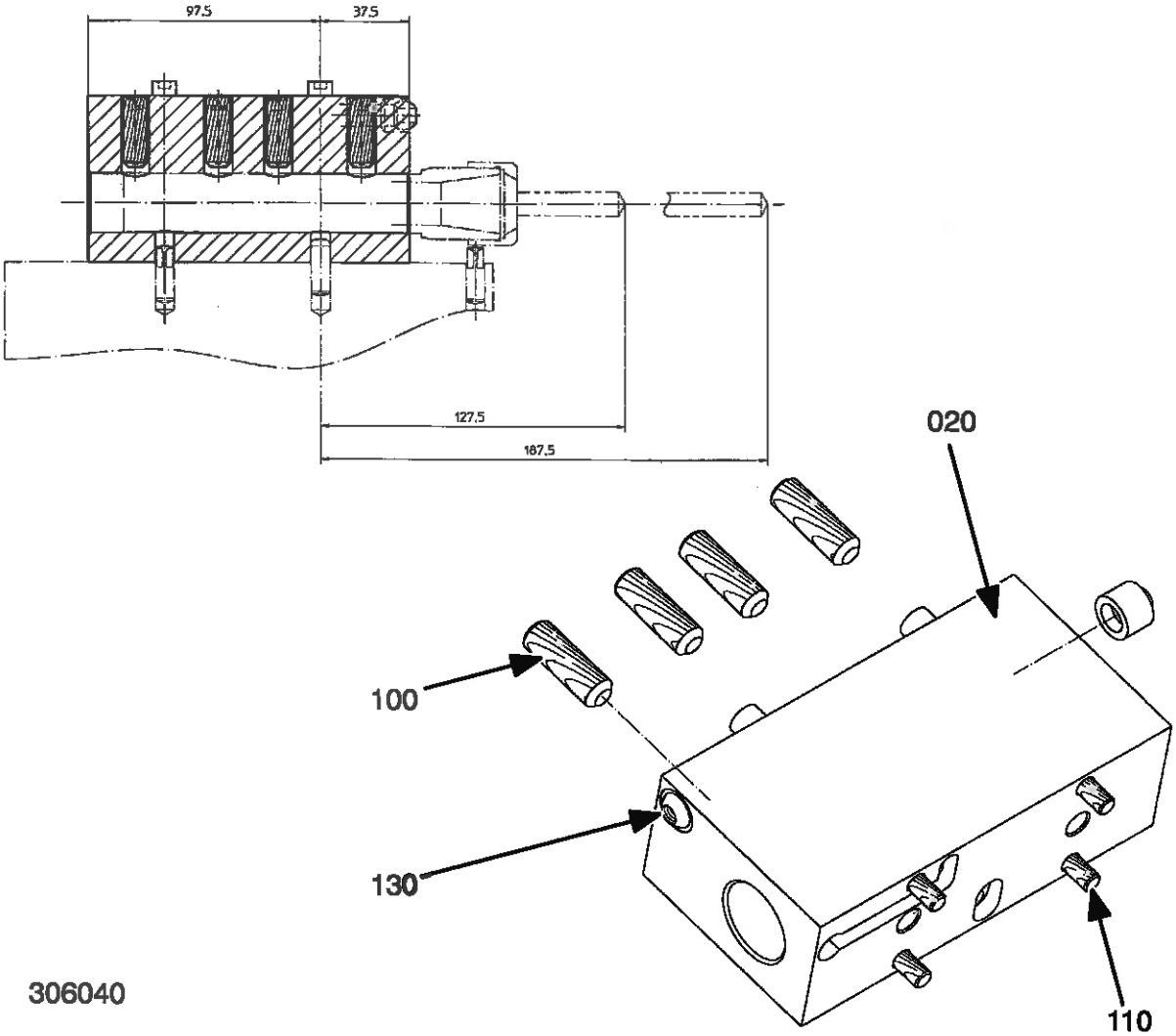

306040

◆ **SAFETY**

Attention ! A tool protruding at the back of 25mm-∅ Toolholder (306040) by more than 21 mm may cause conflicting geometrics with the protective shutters of the live-spindle drives.

25mm-∅ TOOLHOLDER CHANGE	
To start with : Set the machine in the reference position.	
What to do ?	How ? What for ? Notes
Dismounting	
• Unscrew four Fastening Screws 110.	
• Take down the toolholder.	
• Block the oil spout ...	... if required.
Mounting	
• Fit another toolholder ...	... set in place by the two locating pins.
• Screw in and tighten four Fastening Screws 110.	

Notes on COLLET HOLDER EXTENSION for 25mm-∅ TOOLHOLDER

The distance between the collet nose and the shaft diameter must be ⩽ 40 mm to allow for unhindered application on the vertical support.

Attention ! If Extension Nut ∅ > 35 mm it conflicts with the front locating pin.

TORNOS BECHLER

USER INTERFACE OPERATION

ELECTRONIC AND NUMERIC CONTROLS

DECO 20 mm
DECO 26 mm
300403 E

ATTENTION !
Before handling the machine, read first the information contained in the leaflet entitled "SAFETY REGULATIONS"

TORNOS-BECHLER S.A.
CH-2740 MOUTIER / Suisse
Internet: http://www.tornos.ch

© 1999 Printed in Switzerland

TABLE OF CONTENTS

1. PRECAUTIONARY NOTES BEFORE OPERATION 1

2. USER INTERFACE 1

2.1 NC KEYBOARD (PROGRAMMING) 2
2.2 CONTROL PANEL (PUSHBUTTONS AND SELECTORS) 4
2.2.1 Mode Selector 5
2.2.2 Axis / Channel Selector 6
2.2.3 Other Functions 7
2.2.4 Main Pushbuttons 9

3. BASIC SEQUENCE FOR STARTING MACHINE 1

3.1 MAIN SWITCH ON / OFF 1
3.2 NC ON / OFF 1
3.3 POWER ON / OFF 2

4. ALARM ORGANIZATION 1

4.1 ALARM TYPES 1
4.2 DISPLAY ALARMS 1
4.3 CLEAR PMC ALARMS 2
4.3.1 PMC Alarm Classes 2
4.4 CLEAR NC ALARMS 3
4.5 EMERGENCY STOP 4

5. BASIC OPERATION 1

5.1 DOWNLOAD A PROGRAM INTO CNC OVER RS-232 1
5.1.1 Obligatory Program Conversion 2
5.2 DISPLAY PROGRAMS 3
5.3 EDIT TOOL GEOMETRY AND WEAR 4
5.3.1 Keys To Edit Tool Geometry & Wear 5
5.3.2 Restore Offsets 6

6. MANUAL CONTROL OF MACHINE FUNCTIONS 1

6.1 REFERENCE AN AXIS 1
6.2 AUTO REFERENCE ALL AXES 2
6.3 SLOW DOWN / SPEED UP / STOP / RESTART SPINDLES 3
6.4 AXIS FEED OFF / ON 4
6.5 JOG AXES 4

9.3.2 Device For Monitoring Part Presence In Manipulator Gripper Jaws 5
9.3.3 Disable Part Gripper ("Manipulator") Function 6
9.4 SENSOR 7
9.4.1 Sensor MDI Control 8
9.5 MDI CONTROL FOR THRU-PICKOFF-SPINDLE FLUSH COOLANT 9
9.6 ADDITIONAL M-FUNCTIONS FOR MDI 9
9.7 DEEP DRILLING CONTROL 10
9.8 15-BAR PUMP CONTROL 11
9.8.1 Disable M45 HP-Pump-On Function 11
9.9 POSITIONED S1 / S4 SPINDLE LOCKING CONTROL 12

10. CUSTOMER PAGES 1

10.1 DISPLAY END-OF-BAR 1
10.2 CHECK MACHINE NO. (ALARM 1006: WRONG MACHINE) 3
10.3 Z4 TORQUE LIMIT FOR PART-PICKOFF 4
10.4 DISPLAY CRASH PAGE 5
10.5 DISPLAY PMC AND CEXEC SOFTWARE NO 6
10.6 DISPLAY MACRO SOFTWARE NO. 7
10.7 OPERATING LONG PARTS 8
10.8 EDIT CNC TIME AND DATE 9

11. MAINTENANCE PAGES 1

11.1 MAINTENANCE EVERY 500, 1500 AND 2500 HOURS' OPERATION 1
11.2 MAINTENANCE EVERY 1000 AND 2000 HOURS' OPERATION 2
11.3 MAINTENANCE EVERY 3000 HOURS' OPERATION 3

1. PRECAUTIONARY NOTES BEFORE OPERATION

▲ Read the instruction before operating the machine.

▲ Should the user disregard the instructions of this manual, TORNOS-BECHLER declines any liability whatsoever.

▲ A battery backup is provided for storage of the part programs in the numerical control while it is off.

When BAT message appears down on the display, the numerical control must not be turned off before replacing the backup battery.

THE BACKUP BATTERY TO BE REPLACED WHILE THE NUMERICAL CONTROL IS ENERGIZED.

If you turn the NC off while replacing the battery, all your programs will be irretrievably deleted and the NC will have to be completely reinitialized.
Change the battery annually.

▲ Certain maintenance works are absolutely necessary to ensure good operation of the machine. They are given in the MAINTENANCE SCHEDULE on the machine (or see Instructions 300401 / 300441: INSTALLATION-OPERATION-MAINTENANCE).

▲ Open and reclose the central hatch each and every time the machine is started. This procedure is an obligatory check on the correct operation of the hatch switches.

2. USER INTERFACE

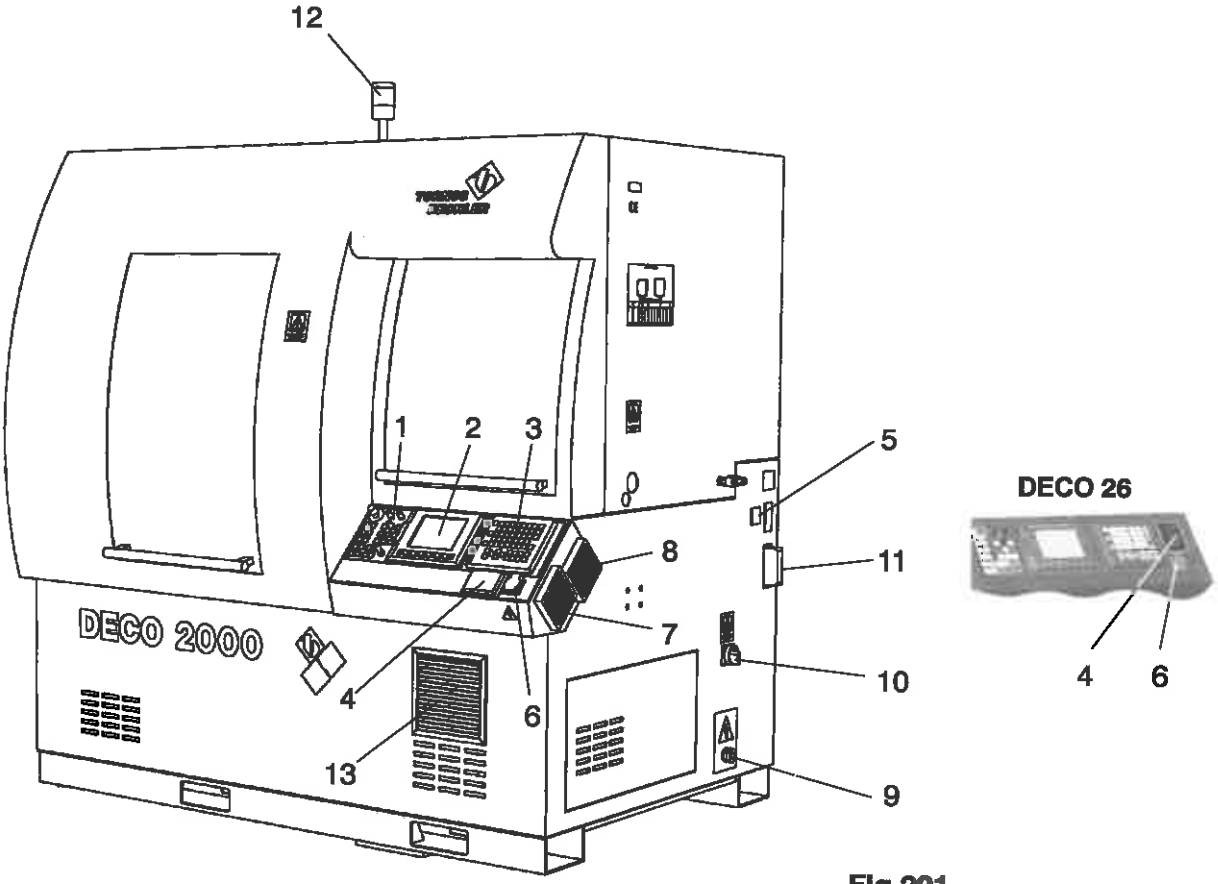

Fig.201

1	Control Panel	(AR90)
2	NC Screen	(AR1)
3	NC Keyboard	(AR3)
4	Socket	RS 232
5	Hour Counter	(PT1)
6	Service Socket	(XS1)
7	NC-Console Exhaust Filter	
8	NC-Console Fan	(EV3)
9	Mains Connection	
10	Main Switch	(QS0)
11	Barfeeder Socket	(XS 94)
12	Red Signalling Lamp	(HL1)
13	Fan	(EV 4)

SYSTEM	Access to NC data.
MESSAGE	Display messages or alarms.
GRAPH	Not used.
CUSTOM	Display axis position (**in Channel 1 only!**).
ALTER	Replace a chain of characters with another one.
INSERT	Enter data in NC.
DELETE	Delete one or more characters when editing or modifying a program.
↑ PAGE	Page UP. Application according to operating mode.
↓ PAGE	Page DOWN. Application according to operating mode.
←	Move cursor LEFT.
→	Move cursor RIGHT.
↑	Move cursor UP.
↓	Move cursor DOWN.
HELP	Display alarms in detail, NC operation tips, table of parameters.
RESET	Clear alarms, stop program run, initialize program start.

2.2.1 Mode Selector

	Select EDIT mode to enter a program in NC. Power must be on to activate this mode.
	Select AUTO mode to execute part program. Power must be on to activate this mode.
	Select MDI mode (manual data input) to execute M, S Functions.
	Select JOG mode (motion) to displace manually an axis selected with Axis / Channel Selector.
x1	Select INCREMENTAL axis mode (motion) to move axis by 0.1 µm (**1** x 0.1 µm) an axis selected with Axis / Channel Selector.
x10	Select INCREMENTAL axis mode (motion) to move axis by 1 µm (**10** x 0.1 µm) an axis selected with Axis / Channel Selector.
x100	Select INCREMENTAL axis mode (motion) to move axis by 10 µm (**100** x 0.1 µm) an axis selected with Axis / Channel Selector.
x1K	Select INCREMENTAL axis mode (motion) to move axis by 100 µm (**1K** or 1000 x 0.1 µm) an axis selected with Axis / Channel Selector.
	Select AXIS-BY-AXIS REFERENCING mode to reference an axis selected with Axis / Channel Selector.
	Select AUTOMATIC REFERENCING mode to reference all axes.

2.2.3 Other Functions

	AXIS FEEDRATE OVERRIDE from 0 to 100% by 1% steps. For all axes : [-] decrementation from 105 to 0%, [+] incrementation from 0 to 105%,
	SPINDLE SPEED OVERRIDE from 0 to 100% by 1% steps. For all spindles : [-] decrementation from 120 to 50%, [+] incrementation from 50 to 120%,
	Coolant ON.
	Coolant OFF.
	Change coolant flowrate.
	Open main spindle collet.
	Close main spindle collet.
	Open pickoff spindle collet.
	Close pickoff spindle collet.
F1	Reserve button (Function 1)
F2	Reserve button (Function 2)
F3	Clear Alarms 2032 and 2036 : 2032 FAULT MANIPULATOR 2036 ALARM SENSOR FOR LONG-PART EJECTION

2.2.4 Main Pushbuttons

	Emergency Stop
	NC ON
	NC OFF
	Power ON
	Power OFF

3. BASIC SEQUENCE FOR STARTING MACHINE

3.1 MAIN SWITCH ON / OFF

- Turn Main Switch 10 ON (Fig. 201) to make machine controls and members operational.

SEQUENCE	NOTES
	Main Switch is OFF : • All machine members are dead. ▲ Important : After turning the machine off, wait 10 sec before you turn it on again.
	Main Switch is ON : • Machine control cabinet is energized. • NC can be turned on. • Fans are working.

3.2 NC ON / OFF

Note : No member of the machine can be activated if the NC is off.

SEQUENCE	NOTES
	NC is ON and the machine members can be controlled.
	NC is OFF and all machine members are dead. ▲ Attention ! Do not turn NC off (with Main Switch) when machining to avoid damage to the work and/or tools.

4. ALARM ORGANIZATION

4.1 ALARM TYPES

The following alarm types are available :

- Alarms coming from the machine, called PMC alarms,
- Alarms coming from the numerical control, called NC alarms,
- Alarms coming from the canned cycles.

PMC alarms are classified in 5 levels of importance according to how they affect operation of the machine :

- Class 0 : Machine is in no way affected.
  Some of these alarms remain active for 5 seconds and then disappear. Others persist until the cause is eliminated.
- **Class 1** : Cycle stops at end-of-part.
- **Class 2** : Cycle stops instantaneously.
- **Class 3** : Cycle and spindles stop instantaneously.
- **Class 4** : Cycle and hydraulic power stop instantaneously.

Example of PMC alarm : Alarm coming from pressostat, sensor, etc...

Example of NC alarm : Alarm caused by an error in programming or in data transfer, etc...

4.2 DISPLAY ALARMS

While the machine is under alarm or is not in cycle Red Lamp 12 (Fig. 201) flashes as in diagram below :

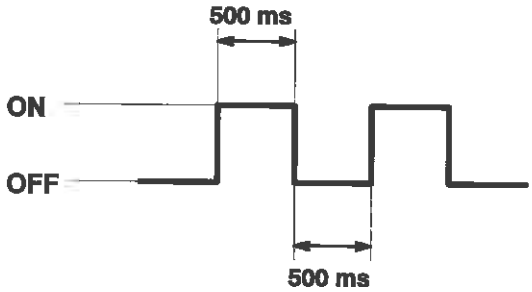

For PMC Alarm Class 4 : Red Lamp is **permanently on**.

PMC ALARM CLASSES		
Class	**What happens ?**	**Conditions for restarting**
4	• Immediate feed hold. • Reading a new block is stopped. • Cycle stop. • Motors of spindles, lubrication system and drilling attachments stop. • Axes power stop.	• Alarm reset. • Axes power ON. • Motors ON. • Cycle start.
3	• Immediate feed hold. • Reading a new block is stopped. • Cycle stop. • Motors of spindles, lubrication system and drilling attachments stop.	• Alarm reset. • Motors ON. • Cycle start. • Feeds release.
2	• Immediate feed hold. • Reading a new block is stopped. • Cycle stop.	• Alarm reset. • Cycle start.
1	• Cycle stop at end-of-part	• Alarm reset. • Cycle start.
0	• None.	

4.4 CLEAR NC ALARMS

Any error concerning NC, such as error of programming, of data transfer, of axis displacement, etc. is displayed on NC Screen. From case to case, any error can interrupt the machine operation to a lesser or greater extent.

RESET • To clear an alarm, eliminate the cause thereof and then press this key.

☐ **Note :**
If the alarm does not disappear on pressing RESET, turn the machine power supply OFF and then ON.

5. BASIC OPERATION

5.1 DOWNLOAD A PROGRAM INTO CNC OVER RS-232

DELETE A PROGRAM	
• **Delete the existing program before downloading a new one into CNC. Follow this sequence :**	
SEQUENCE	**NOTES**
	• Select Channel 1 with Axis / Channel Selector.
	• Select EDIT mode with Mode Selector.
	• Press to select PROG page over NC Keyboard.
0-9999	• Type **0-9999** over the keyboard. • Press to DELETE.

Prohibition !
If you pressed one of the **[CONV.1]**, **[CONV.2]** or **[CONV.3]** keys to convert a program and **CONVERT** flashes at the bottom of the screen, neither change the mode on the control panel of the machine nor press to RESET.

Caution !

- If you selected the EDIT or AUTO mode, stay in it until **CONVERT** at the bottom of the screen stops flashing.
- If **CONVERT** at the bottom of the screen keeps flashing, stand by until it stops flashing and then press to RESET.

A mode change or resetting with interrupts the program conversion and the ensuing incomplete execution of the program results in poor operation of the machine: spindles do not want to go, axes refuse to get referenced, etc.

- If you interrupt the program conversion, press the **[CONV.1]** or **[CONV.3]** keys to recommence the operation.

5.2 DISPLAY PROGRAMS

DISPLAY PROGRAMS

To start with : Interrupt the program.

To display a program list from the NC storage, follow this sequence :

SEQUENCE	NOTES
	• Select Channel 1 with Axis / Channel Selector.
	• Select EDIT mode with Mode Selector.
	• Press once or more times PROG key of NC until stored programs appear.

5.3.1 Keys To Edit Tool Geometry & Wear

HARD AND SOFT KEYS TO EDIT TOOL GEOMETRY & WEAR	
↓ PAGE	PAGE down
↑ PAGE	PAGE up
↑	Cursor up to select an OFFSET
↓	Cursor down to select an OFFSET
←	Cursor left to select an OFFSET / WEAR / SHOULDER type
→	Cursor right to select an OFFSET / WEAR / SHOULDER type
CAN	CANCEL characters entered over NC Keyboard
[AXISRH]	Select another OFFSET Table : e.g. • Type Y2 over the keyboard. • Press this softkey.
[INPUT]	Enter the value, typed over the keyboard, for OFFSET selected.
[INPUT+]	Increment OFFSET selected by the value typed over the keyboard
[+1]	Increment OFFSET selected by 1 mm for METRIC machines Increment OFFSET selected by 0.00004″ for INCH machines
[-1]	Decrement OFFSET selected by 1 mm for METRIC machines Decrement OFFSET selected by 0.00004″ for INCH machines
	Sélectionne la page permettant de restaurer les OFFSETS (Cf. Restauration des OFFSETS)

☐ **Note**
For INCH machines, the value entered is rounded down by 1 mm.

6. MANUAL CONTROL OF MACHINE FUNCTIONS

6.1 REFERENCE AN AXIS

REFERENCE AN AXIS	
SEQUENCE	**NOTES**
	• Turn Main Switch ON. ▲ **Important :** **After turning the machine off, wait 10 s before you turn it on again.**
	• Turn NC on.
	• Turn power on.
	• Select AXIS-BY-AXIS REFERENCE mode.
X1-Z1-Y1- X2-Y2-X3-Z3- X4-Z4-Y4	• Select the required axis with Axis / Channel Selector. • Open main spindle collet if Z1-axis is selected for referencing. • Open pickoff-spindle collet if Z4-axis is selected for referencing. ☐ **Note :** Before opening the collet make sure that the barfeeder thrust is turned off or that the tube counter weight is blocked whichever may by the case for your machine.
	• Press CYCLE START. The axis selected is being referenced.

Note : In SETTING mode: , reference an axis after CYCLE START: by holding down the key: , see also Para. 7.9.1.

6.3 SLOW DOWN / SPEED UP / STOP / RESTART SPINDLES

Slow Down / Speed Up Spindles without Interrupting Program Execution	
SEQUENCE	**NOTES**
	Slow down S1, S2, S3 and S4 : • Hold down Minus[-] Spindle Speed Override Button
	Speed up S1, S2, S3 and S4 spindles : • Hold down Plus[+] Spindle Speed Override Button. The speed grows until the button is released or up to 120% of the programmed speed. Or press both Plus[+] and Minus[-] buttons together to set spindle override at 100%.

Turn Spindles OFF / ON with Interrupting Program Execution	
☐ **Note :** Pressing Spindle Speed Override keys only does not affect S5-spindle during program execution. S5 can be stopped only if the program execution is interrupted with CYCLE STOP.	
SEQUENCE	**NOTES**
	• Press CYCLE STOP pushbutton to interrupt program execution.
	OFF : • Press Minus[-] Spindle Speed Override Button. All spindles (including **S5**) stop.
	ON : • Press Plus[+] Spindle Speed Override Button. All spindles (including **S5**) start again. **or**
	• Press CYCLE START pushbutton. All spindles (including **S5**) restart with programmed speed.

6.6 OPEN / CLOSE COLLET

OPEN / CLOSE COLLET	
SEQUENCE	**NOTES**
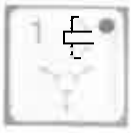	• Press to open **main spindle collet.**
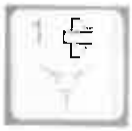	• Press to close **main spindle collet.**
	• Press to open **pickoff-spindle collet.**
	• Press to close **pickoff-spindle collet.**

☐ **Note :**

- The pushbuttons will function only when :
  - ◇ power is on,
  - ◇ program is not in cycle.
- Collets will close automatically when the program is resumed with CYCLE START.
- The program will continue to open / close collets.
- Collets can be opened / closed manually at the END-OF-TABLE.

COOLANT MONITORING OFF / ON

A pressostat monitors the coolant flowrate to prevent damage to tools and work.

If you set a weak flowrate the monitoring will give Alarm **1016**: COOLANT PRESSURE MINIMAL VALUE. If however you want to work at this weak flowrate you can disable the monitoring in the following way :

SEQUENCE	NOTES
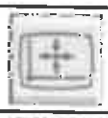	• Press POS key.
	or
	• Press CUSTOM key.
	• Press PAGE RIGHT softkey at the bottom of NC Screen.
[PARAM]	• Press this softkey at the bottom of NC Screen to display :

```
MODE - MDI                                          O0001    N00000

MACHINE PARAMETERS

MACHINE NO                                                   61757

COOLANT MONITORING                                           OFF

MANIPULATOR OPERATION                                        ON
MANIP. NOT SWUNG OUT      X2.0                               OFF
CAGE CLOSED               X2.2                               ON

FEED  OVE  100%                 SPIND  OVE  100%
                                                             S   0  T0000
 MDI  ****  ***  ***            16 : 32 : 08                 CHAN 1
[ CM ON ]    [ CM OFF ]   [          ]   [ MANOFF ]   [          ]
```

[CM ON]	• Press this softkey to enable coolant monitoring.
[CM OFF]	• Press this softkey to disable coolant monitoring.
[MANOFF]	• Press this softkey to disable manipulator. This key is operational in the INIT program with CYCLE STOP. A reset cancels MANOFF.

CODE	CHANNEL	FUNCTION	DO (F)
M166	C1	Feed manipulator to guidebush	F195.2
M167	C1	Retract manipulator to backworking gang	F195.3
M168	C1	Check part absence in mnaipulator gripper jaws / cage	F197.0
M169	C1	Check part presence in mnaipulator gripper jaws / cage	F197.1
M170	C1	Enable torque limit for Z4	F189.0
M171	C1	Disable torque limit for Z4	F189.1
M172	C1	Enable check servo lag for Z4	F189.3
M173	C1	Disable check servo lag for Z4	F189.3
M180	C1	Feed long-part ejector (Y5.7=1)	F189.0
M181	C1	Retract long-part ejector (Y5.7=0)	F198.1
M182	C1	Feed thrustor for long-part evacuation tipper (Y5.5=1)	F198.2
M183	C1	Retract thrustor for long-part evacuation tipper (Y5.5=0)	F198.3
M184	C1	Tip long part ON (Y5.3=1)	F198.4
M185	C1	Tip long part OFF (Y5.3=0)	F198.5
M186	C1	Check retract long-part ejector (Y5.7=1 X8.0=1)	F198.6
M187	C1	Check feed long-part ejector (Y5.7=0 X8.2=1)	F198.7
M188	C1	Check thrustor feed for long part evacuation tipper (Y5.5=1 X9.0=1)	F199.0
M189	C1	Check thrustor retract for long part evacuation tipper (Y5.5=0 X9.2=1)	F199.1
M190	C1	Close 3-position guidebush	F192.5
M191	C1	Adjust guidebush (3-position and MAGIC guidebushes)	F192.4
M192	C1	Open guidebush (3-position and MAGIC guidebushes)	F192.6
M203	C1	S2 polygoning spindle ON cw	
M204	C1	S2 polygoning spindle ON ccw	
M205	C1	S2 polygoning spindle OFF	
M303	C2	S3 C2 Spindle 1 ON cw	
M304	C2	S3 C2 Spindle 1 ON ccw	
M305	C2	S3 C2 Spindle 1 OFF	
M403	C2	S4 C2 Spindle 2 ON cw	
M404	C2	S4 C2 Spindle 2 ON ccw	
M405	C2	S4 C2 Spindle 2 OFF	

6.10 SPINDLE ROTATION MDI CONTROL

MDI Programming for S1 and S2

Note : The MDI mode with its ISO code is in no way related to the AUTO (MEM) mode with its TABLE operation, which is to say the MDI mode operates differently.

SEQUENCE	NOTES
	• Select Channel 1 with Axis / Channel Selector.
	• Select MDI mode with Mode Selector.
	• Select PROGRAM page (MDI) on NC Keyboard.

S1 sequence to continue :

- Enter over NC : **M103 S...** and press **EOB** to turn S1 on, CW.
- Enter over NC : **M104 S...** and press **EOB** to turn S1 on, CCW.
- Enter over NC : **M105 S...** and press **EOB** to turn S1 off.

Note : Spindle Speed Override is enabled for S1 in MDI from 50 to 120%.

Altogether there are two ways to turn S1 off in MDI :

- M105 sequence (see above)
- or press (RESET).

S2 sequence to continue :

As for S1 above but with M203, M204 and M205-functions.

Note : Same note as to S1 sequence above but with M205-function.

6.11 OFFSET S1-SPINDLE FOR PART PICKOFF BY S4-PICKOFF-SPINDLE

Note : The S1-spindle must be offset only when a part is picked up by S4-pickoff-spindle with a profiled collet, e.g. square.

- Enter **G601** over NC Keyboard in Channel 1 (MDI) to cancel the earlier spindle offset angle before you establish a new one.

Position S4-Pickoff-Spindle At 0°	
SEQUENCE	**NOTES**
	• Select Channel 2 with Axis / Channel Selector. • Select MDI mode with Mode Selector. • Select PROGRAM page (MDI) on NC Keyboard.
Operating Sequence To Continue : • Enter over NC Keyboard : **M19** and press EOB	

Note : If you press the NC's RESET key, the S4 you positioned above will go off position and if you also offset **S1** (below), both spindles will go.

Offset S1-Spindle For Part Pickoff	
	• Select Channel 1 with Axis / Channel Selector. • Select MDI mode with Mode Selector. • Select PROGRAM page (MDI) on NC Keyboard.
Operating Sequence To Continue : • Enter over NC Keyboard : **B...** (0° to 360° by 0.1°) and press EOB e.g. **B45.1** • Jog (JOG mode) Z1-axis to check if bar enters profiled collet of Pickoff Spindle. If not, enter another offset angle over NC Keyboard, e.g. **B45.4**. **Note :** When the angle is correct and the part enters the pickoff spindle, continue as follows : • Enter over NC Keyboard : **G600** in Channel 1 (MDI) and press EOB **Now you have completed inputting the angular spindle offset into NC.**	

```
SPINDLE MONIT.                                        O0001    N00000
ALARM
OPERATION                                SPINDLE ORIENTATION
SPINDLE SPEED                            0 RPM
MOTOR SPEED                              0 RPM
SPINDLE          S1
                 0        50        100        150        200
LOAD METER

CONTROL INPUT                            MRDY      *ESP

CONTROL OUTPUT                           SST       SDT

>_
JOG   **** *** ***                       09.10.03            CHAN 2

[ SP.SET ]   [ SP.TUN ]  [ SP.MON ]  [          ]  [          ]
```

The sequence to continue as follows :	
SEQUENCE	**NOTES**
[SP.PRM]	• Press this softkey (SPINDLE PARAMETER) at the bottom of NC Screen.
[SP.MON]	• Press this softkey (SPINDLE MONITORING) at the bottom of NC Screen.

▲ **Important :** If you want to use S1 offset angle for part Pickoff together with positioned polygoning, first find out the former, add to the latter and enter as follows :

e.g. S1 offset angle for Part Pickoff : 31 °
Polygoning positioning angle : 15 ° ⇒ G251 R2 Q46

7. AUTO(MATIC) MODE

7.1 START / STOP PROGRAM EXECUTION

START / STOP PROGRAM EXECUTION	
Objective :	To produce parts.
To start with :	No program is being executed. A new program is in NC. No Alarm Class . 1.

SEQUENCE	NOTES
	• Select AUTO mode.
	CYCLE START • Start active program execution. It is continued if CYCLE STOP button has been pressed. • Restart active program, interrupted by END-OF-TABLE.
	CYCLE STOP • Press to interrupt program execution. Displacements or dwells are immediately interrupted.
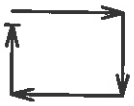	END-OF-TABLE : This pushbutton (light) comes on when activated. • Interrupt program execution at END-OF-TABLE. • Press again, to disable this function. The pushbutton (light) comes off.
	AXIS FEEDRATE OVERRIDE • Press Minus[-] Pushbutton to reset feedrate at 0 and stop program execution. • Press Plus[+] Pushbutton to recover feedrate and continue program execution.

7.2 DISPLAY AXIS POSITION

SEQUENCE	NOTES
 	To display position of axes : • Press POS key. **or** • Press CUSTOM key.

7.4 INTERRUPT AUTO CYCLE FOR INSPECTION

INTERRUPT AUTO CYCLE FOR INSPECTION

To interrupt part program execution and when necessary, to stop spindle for inspection of finished part or tools, proceed as follows :

SEQUENCE	NOTES
	CYCLE STOP • Press to interrupt program execution. Displacements or dwells are immediately interrupted. Or you can stop program execution with : AXIS FEEDRATE OVERRIDE • Press Minus[-] Pushbutton to reset feedrate at 0.

▲ **Attention !**
According to the circumstances, interrupting the automatic cycle can cause damage to the work and/or tools.

	Spindles OFF : • Press Minus[-] Pushbutton of Spindle Speed Override. **Spindles ON :** • Press Plus[+] Pushbutton of Spindle Speed Override. Spindles resume now their speed as programmed.

To resume part program execution :

	CYCLE START • Press to make spindles regain their speeds. Program execution is resumed where it was interrupted.

Note : Do not turn the power off as this automatically resets the program.

```
AUTO - MODE                                        O0002    N01280

M01                          INACTIVE

FEED   OVE   100%            SPIND   OVE  100%

MEM  ****  ***  ***                08 : 36 : 44          CHAN 1
[ ACTIVE ]   [ INACTI ]   [          ]   [          ]   [          ]
```

7.6 INTERRUPT AUTO CYCLE OVER STOP-AT-A-DETERMINED-TIME FOR INSPECTION

INTERRUPT AUTO CYCLE OVER STOP-AT-A-DETERMINED-TIME FOR INSPECTION

To interrupt part program execution for inspection of finished part or tools, proceed as follows :

SEQUENCE	NOTES
	• Press POS key. **or** • Press CUSTOM key.
[STOP]	• Press this softkey at the bottom of NC Screen to display :

7.7 INTERRUPT AUTO CYCLE OVER END-OF-TABLE FOR INSPECTION

INTERRUPT AUTO CYCLE OVER END-OF-TABLE FOR INSPECTION	
SEQUENCE	**NOTES**
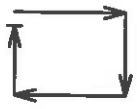	END-OF-TABLE : This pushbutton (light) comes on when activated. • Interrupt program execution at END-OF-TABLE. • Press again, to disable this function. The pushbutton (light) comes off.
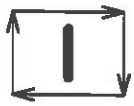	CYCLE START • Press to restart the program from the beginning.

☐ **Note :**

- Press CYCLE START to execute the next program if the previous program stopped at the end-of-table of a non-relooped program such as initialization program (O0001) or load-a-new-bar program, etc.
- Press CYCLE START to execute the program from the beginning if the program stopped at the end-of-table of a relooped program, e.g. of a machining program.
- END-OF-TABLE pushbutton (light) comes on and each time the program stops at the end-of-table, you can machine part by part with the CYCLE START pushbutton

7.9 INTERRUPT AUTO CYCLE OVER RUN-FORWARD FOR INSPECTION

INTERRUPT AUTO CYCLE OVER RUN-FORWARD FOR INSPECTION	
To interrupt the program in auto cycle and RUN **it** FORWARD **for better inspection of the part or tools and to resume the program, proceed as follows :**	
SEQUENCE	**NOTES**
	CYCLE STOP • Press to interrupt program execution. Displacements or dwells are immediately interrupted.
	• Press Plus[+] Pushbutton to RUN the program FORWARD. Axes move with 5% of programmed feedrate.
	Spindles OFF : • Press Minus[–] Pushbutton of Spindle Speed Override. **Spindles ON :** • Press Plus[+] Pushbutton of Spindle Speed Override. Spindles resume now their speed as programmed.
	• Press CYCLE START to resume the program execution. If the spindles were stopped they resume now their speed as programmed.

7.10.1 Reference An Axis In SETTING Mode

REFERENCE AN AXIS IN SETTING MODE	
SEQUENCE	**NOTES**
	• Set Key Selector 4 in Control Panel to SETTING mode.
	• Select AXIS-BY-AXIS REFERENCE mode.
X1-Z1-Y1-X2-Y2-X3-Z3-X4-Z4	• Select the required axis with Axis / Channel Selector. • Open main spindle collet if Z1-axis is selected for referencing. • Open pickoff-spindle collet if Z4-axis is selected for referencing. **Note :** Before opening the collet make sure that the barfeeder thrust is turned off or that the tube counter weight is blocked whichever may by the case for your machine.
	• Press CYCLE START.
	• Hold down this button to reference the axis.

7.10.3 Start A Program With SETTING Mode

START A PROGRAM WITH SETTING MODE	
SEQUENCE	**NOTES**
	• Set Key Selector to SETTING mode.
	• Press RESET key.
	• Press CYCLE START.
	• Press Plus[+] Pushbutton to RUN the program FORWARD. Axes move with 5% of programmed feedrate.
	Spindles OFF : • Press Minus[-] Pushbutton of Spindle Speed Override. **Spindles ON :** • Press Plus[+] Pushbutton of Spindle Speed Override. Spindles resume now their speed as programmed.
☐ **Note :** AXIS RETRACT function (see Chapter 7.6) can be used in SETTING mode. M / S Functions are programmable in MDI.	

7.11 M150 ADJUST FEEDRATE OVERRIDE

M150 : Adjust feedrate override.

M151 : Cancel adjust-feedrate override.

Note : M150 equalizes Axis Feedrate Override parameters with those of Spindle Speed Override :

e.g. If Spindle Speed Override stands at 84% and Axis Feedrate Override at 67%, enabled M150 will set the latter also at 84%.

With enabled M150, if you change the spindle speed by pressing Plus[+] / Minus[-] pushbutton of Spindle Speed Override the axis feedrate will also change.

8. ALARM LISTS

8.1 MACHINE (PMC) ALARMS

Alarm No.	CLASS	DESIGNATION	CAUSE
1000	3	TOOL BREAKAGE SENSOR 1	Sensor 1 detected a broken tool
1001	3	PART PRESENCE SENSOR 1	Sensor 1 detected a part
1002	3	TOOL BREAKAGE SENSOR 2	Sensor 2 detected a broken tool
1003	3	PART PRESENCE SENSOR 2	Sensor 2 detected a part
1004	3	TOOL BREAKAGE SENSOR 3	Sensor 3 detected a broken tool
1005	3	PART PRESENCE SENSOR 3	Sensor 3 detected a part
1006	3	WRONG MACHINE	Program No. for machine data entered in machine does not correspond to Machine No.
1007	3	OPTION NOT AVAILABLE	
1008	0	GUIDEBUSH CHANGE IN PROGRESS	After G400 guidebush change, a G40X is obligatory to reset software limit switches.
1009	4	FAULT CIRCUIT BREAKER	Circuit breaker is open.
1010	4	FAULT COOLANT VARIATOR, CTR-OP	Coolant flowrate regulator or counter-operation is faulty
2011	0	MESSAGE ON OPTION SOCKET	Optional socket message present
2012	1	ALARM CLASS 1 OPTION SOCKET	Optional socket alarm Class 1 present
1013	3	ALARM CLASS 3 OPTION SOCKET	Optional socket alarm Class 3 present
1014	0	OPEN SPINDLE COLLET	Open collet for referencing
2015	0	DOOR OPEN	Hatch or guard is open
1016	3	COOLANT PRESSURE MIN. VALUE	Coolant pressure is too low
2017	0	FAULT COOLANT PRESSOSTAT	Coolant pressostat indicates 1 when coolant pump is off
1018	4	ALARM PRESENT FOR 10 MIN	Alarm Class 1, 3 present since 10 min
1019	0	LOW AIR PRESSURE	No or not enough compressed air (alarm after power is on)
1020	3	FAULT AIR PRESSURE	Coolant pressostat indicates at 0 all the time (alarm in cycle if pressure drops longer than 3 s)
2021	1, 3	FAULT CHIP CONVEYOR	Signal Chip Conveyor OK is absent (conveyor locked)
1022	4	EMERGENCY STOP CHIP CONVEYOR	Conveyor emergency stop is depressed
2023	0	LOADING IN PROGRESS	Loading a new bar
1024	0	TUBE / FEEDER NOT RDY FOR MACH'G	Tube not initialized or electric defect of tube / barfeeder
1025	4	FAULT TUBE / FEEDER	Error in bar feeding or defect of tube / barfeeder
2026	0	END-OF-BAR	Active end-of-bar
1027	3	FAULT DRILL. ATT. CONTROL OUT-PUT	In NC's I/O board, one or more control outputs for drilling attachment are defective
2028	1	BATCH FINISHED	Number or parts to be machined has been reached.
2014	0	OPEN PICKOFF-SPINDLE COLLET	Open collet for referencing
1029	3	CRASH RISK X4-Y3, Y4 or Z4	Crash risk: Stop and clear axes.
1030	3	G28 AND AXIS NOT REFERENCED	Axes have not returned to their reference point
1031	3	Z4 CRASH	Collision of Z4 during part pickoff or retract after cutoff

Alarm No.	Description / Remedy
059	The program with the selected number cannot be searched, in external program number search.
060	Commanded sequence number was not found in the sequence number search.
066	An unallowable G code was commanded between two blocks specified by address P and Q in G71, G72 or G73.
067	G70, G71, G72, or G73 command with address P and Q was specified in MDI mode.
070	The memory area is insufficient.
071	The address to be searched was not found. Or the program with specified program number was not found in program number search.
072	The number of programs to be stored exceeded 63 or 125 (option).
073	The commanded program number has already been used. (Erase all programs before loading a new one)
074	The program number is other than 1 to 9999.
078	A program number or a sequence number which was specified by address P in the block which includes an M98, M99, M65 or G66 was not found.
079	The contents of the program stored in the memory did not agree with that in tape in collation.
080	In the area specified by parameter E, the measuring position reach signal does not come on. (Automatic tool compensation function).
081	Automatic tool compensation was specified without a T code. (Automatic tool compensation function).
082	T code and automatic tool compensation specified in the same block. (Automatic tool compensation function)
085	When entering data in the memory by using ASR or Reader / Puncher interface, an overrun, parity or framing error was generated. The number of bits of input data or setting of baud rate is incorrect.
086	When entering data in the memory by using Reader / Puncher interface, the ready signal (DR) of reader / puncher was turned off.
087	When entering data in the memory by using Reader / Puncher interface, though the read terminate command is specified, input is not interrupted after 10 characters read.
090	The reference point return cannot be performed normally because the reference point return start point is too close to the reference point or the speed is too slow.
092	The commanded axis by G27 (Reference point return check) did not return to the reference point.
098	A command of the program restart was specified without the reference point return operation after power ON and emergency stop, and G28 was found during search.
099	After completion of search in program re-start, a move command is given with MDI.

Alarm No.	Description / Remedy
140	It was attempted to select or delete in the background a program being selected in the foreground. • Select MDI mode to clear the alarm: PROGRAM (BG-EDIT) is selected instead of PROGRAM page. • Press Softkeys **[OPRT]** and **[BG-END]** at the bottom of NC Screen: PROGRAM page is displayed and the program can be deleted.
194	SPINDLE COMMAND IN SYNCHRO-MODE Spindle commanded in CONTOUR CONTROL mode (C-axis) or in POSITION CONTROL or RIGID TAPPING during SYNCHRO mode.
197	The program commanded the Cf axis to move when COFF signal was ON.
210	M198 and M099 are executed in the schedule operation. M198 is executed in the DNC operation.
220	In the synchronous operation, movement is commanded by the NC program or PMC axis control interface for the synchronous axis.
221	Polygon machining synchronous operation and axis control or balance cutting are executed at same time.
224	Referencing has not been executed (see also spindle POSITION CONTROL mode)

8.2.2 Absolute Pulse Coder (APC) Alarms

Alarm No.	Description / Remedy
300	Manual reference point return is required for axis.
301	Axis APC communication error. Failure in data transmission.
302	Axis APC overtime error. Failure in data transmission.
303	Axis APC framing error. Failure in data transmission.
304	Axis APC parity error. Failure in data transmission.
305	Axis APC pulse miss alarm. APC alarm.
306	Axis APC battery voltage has decreased to a low level so that the data cannot be held. APC alarm.
307	Axis APC battery voltage at a level where the battery must be renewed. APC alarm.
308	Axis APC battery voltage has reached a level where the battery must be renewed (including when power is OFF). APC alarm.
350	Encoder is faulty. (See Diagnostics Nos 202 and 204 below for more details)

If in Diagnostics No. 200 **OVL**=1 (Servo Alarm No. 400 is released) :

ALD 0 Motor overheating

ALD 1 Amplifier overheating

If in Diagnostics No. 200 **FBA**=1 (Servo Alarm No. 416 is released) :

ALD	EXP	Alarm Description
1	0	Measurement system disconnection
1	1	Separately installed measurement system disconnection
0	0	Measurement system is disconnected due to software

Alarm No.	Description / Remedy
401	Speed check READY signal (VRDY) comes off : 1) Check supplies at amplifier. 2) Cable between amplifier and NC is disconnected. 3) NC axis board is faulty.
404	Position control READY signal (MCON) comes off while position control READY signal (DRDY) does not come off, or position control READY signal (DRDY) comes on although READY signal (MCON) did not come on when power was turned on. • Check if servo interface module and amplifier are properly connected.
405	Position control system fault. A reference point return failure due to a trouble in NC or servo system. • Recommence operation with the manual reference point return.
410	In axis, the position deviation amount during stop is greater than the setting value.
411	The position deviation amount is larger than the setting value during move in axis.
413	The contents of the axis error register exceed 32767. This error is usually caused by various setting failures.
414	An error in the digital servo system of the axis. (See Diagnostics Nos 200 and 204 below for more details)

Diagnostics No. 200							
#7	#6	#5	#4	#3	#2	#1	#0
OVL	LV	OVC	HCA	HVA	DCA	FBA	OFA

OVL Overheating alarm

LV Low voltage in amplifier

OVC Overcurrent inside digital amplifier

HCA Abnormal current alarm in amplifier

HVA Overvoltage in amplifier

DCA Regenerative discharge unit circuit alarm on amplifier

FBA Disconnection alarm

OFA Operation-over-tolerance alarm inside digital servos

8.2.4 Overtravel Alarms

Alarm No.	Description / Remedy
500	Travel limit [+] in X-axis is exceeded.
501	Travel limit [.] in X-axis is exceeded.
502	2nd travel limit switch [+] in X-axis is exceeded.
503	2nd travel limit switch [.] in X-axis is exceeded.
504	3rd travel limit switch [+] in X-axis is exceeded.
505	3rd travel limit switch [.] in X-axis is exceeded.

8.2.5 Overheat Alarms

Alarm No.	Description / Remedy
700	NC overheat. • Check that fans operate normally. • Clean air filters.
701	NC fans overheat.
704	Spindle overheat detected by spindle fluctuation detection.

8.2.6 Serial Spindle Alarms

Alarm No.	Description / Remedy
749	S-SPINDLE LSI ERROR Serial communication error while the system is charged after Power ON. 1) Optical cable not connected or interrupted. 2) MAIN CPU BOARD or OPTION 2 BOARD defective. 3) Spindle amplifier board defective. • Cut off spindle amplifier supply if the alarm occurs on starting NC or if the alarm has not been cleared.
750	SPINDLE SERIAL LINK START FAULT The alarm occurs when spindle amplifier is nor ready for correct operation when power is on (serial spindle system). 1) Optic cable is not properly connected or spindle amplifier is off. 2) NC is on under conditions other than SU-01 or AL-24 for spindle amplifier. Turn spindle amplifier off and on. 3) Other cause (bad cabling). 4) 2nd spindle (when SP2 , bit 4 of Parameter 3701, is 1) is in one of the above conditions 1) to 3). (See Diagnostics No. 409 below for more details)

Alarm No.	Description / Remedy
916	DRAM PARITY. RAM parity error in DRAM module. • Clear memory or replace DRAM module.
920	SERVO ALARM (1/2/3/4 AXIS) Watchdog alarm or parity error in servo module. • Replace servo module or MAIN CPU BOARD (axis control board)
922	SERVO ALARM (5/6/7/8 AXIS) Watchdog alarm or parity error in servo module. • Replace servo module or MAIN CPU BOARD (axis control board)
924	Digital servo module is not installed. • Check if servo control modules our servo interface modules on MAIN CPU BOARD or on OPTION 2 BOARDS are properly mounted.
930	CPU error (abnormal interrupt) : MAIN CPU BOARD is faulty.
945	Communication error in serial spindles: Optic cable can be disconnected.
950	PMC error: PMC module on MAIN BOARD is faulty.
951	PMC-RC error. (Watchdog alarm)
970	Parity or NMI error in PMC-RB or PMC-RA2 module : MAIN BOARD is faulty.
971	SLC communication error in PMC-RB , PMC-RA1, or PMC-RA2. • Check if PMC module on MAIN BOARD is correctly connected to I/O unit (I/O Link).
972	NMI on a board other than MAIN CPU BOARD : OPTION 1/2/3 CARD can be faulty.
973	NMI, cause unknown.
974	FANUC BUS error : MAIN CPU or OPTION 1/2/3 BOARD may be faulty.
975	MAIN CPU BOARD BUS error / faulty.
976	Local BUS error. MAIN CPU BOARD BUS faulty.

8.2.7 PNC-DECO Alarms

Alarm No.	Description / Remedy
218	Command is missing or out of range at the start of polygoning for Master Spindle Ratio P or Polygoning Spindle Ratio Q.
5018	Master spindle speed or polygoning synchro exceeds limit value. Or because the speed is too low the commanded speed ratio cannot be maintained.
5900	Axis servo program error : Program not converted (see Diagnostics Nos 900 and 901). Program Diagnostics No. 900 in conversion alarm. Sequence Diagnostics No. 901 in conversion alarm.

Alarm No.	Description / Remedy
5923	THREADING DOES NOT END. Threading is not finished. Threading is not finished whereas the following threading has been commanded. Threading is not finished whereas the programming cycle is carried out. No threading has been carried out (Spindle encoder pulse has not been found).
5925	Axis positioning error in check point (ITP) has been established by Check Bit # 3. Example: N100 P1000 Q 00001000 ... , Parameter 7460 value. See Diagnostics No. 905 and 906 below for more details on the axis which released alarm.

- Press the SYSTEM hardkey on CN Keyboard.
- Press the **[SYSTEM]** and **[DGNOS]** softkeys.
- Press the PAGE UP/DOWN keys to display Diagnosics 905 and 906.

DIAGNOSTIC (CHECK COORDINATE)								
905	A18	A17	(Z4) A16	(Z1) A15	(Y2) A14	(X2) A13	(Y1) A12	(X1) A11
	0	0	0	0	0	0	0	0
906	A28	A27	A26	A25	(Y4) A24	(X4) A23	(Z3) A22	(X3) A21
	0	0	0	0	0	0	0	0

5930	No program selected.
5931	Program selected is not available.
5935	Parameter 7450 is illegal. In AXIS RETRACT function (axis return in position after manual operation), the same order to return has been specified for one or more axes.
5940	While a spindle is in synchro, a synchro of another spindle has been commanded.
5941	In spindle synchro, the slave spindle is identical with the master spindle. Or a spindle other than 1, 2, 3 and 4 has been commanded as slave.
5942	The master spindle is not in SPEED CONTROL mode. Spindle synchro cannot be commanded in POSITION CONTROL mode or CONTOUR CONTROL mode.
5943	The slave spindle is not in SPEED CONTROL mode. Spindle synchro cannot be commanded in POSITION CONTROL mode or CONTOUR CONTROL mode.

9. OPTIONS

9.1 ENABLE / DISABLE WRITE PARAMETER

ENABLE / DISABLE WRITE PARAMETER	
To enable WRITE parameter to enter system / PMC parameters, proceed as follows:	
SEQUENCE	**NOTES**
	• Select MDI mode with Mode Selector.
2	• Select CHANNEL 2 with Axis / Channel Selector.
	• Press once or more times OFFSET SETTING key in NC Keyboard until SETTING [HANDY] appears at the top of NC Screen.

```
SETTING [ HANDY ]                                        O0002   N01254

PARAMETER WRITE      =     1 ( 0 : DISABLE              1 : ENABLE )
TV CHECK             =     0 ( 0 : OFF                  1 : ON )
PUNCH CODE           =     1 ( 0 : EIA                  1 : ISO )
INPUT UNIT           =     0 ( 0 : MM                   1 : INCH )
I/O CHANNEL          =       1 (0 - 3 : CHANNEL NO.)
SEQUENCE NO.         =     0 ( 0 : OFF                  1 : ON )
TAPE FORMAT          =     0 ( 0 : NO CNV                1: F 15
SEQUENCE STOP        =           0 ( PROGRAM  NO. )
SEQUENCE STOP        =           0 ( SEQUENCE  NO. )
CONTRAST             ( + =  [ON:1]     - = [OFF : 0] )
>_
MDI   ****  ***  ***                 15 : 58 : 18          CHAN 2
 [ OFFSET ]    [ SETING ]                                [  OPRT  ]
```

To *enable* parameter input into Channel 2 :

- Position the cursor on the **PARAMETER WRITE** line.
- Enter figure 1 over the keyboard.

To *enable* parameter input into Channel 1 :

- Quit CHANNEL 2 setting 2 on Axis / Channel Selector.
- Position the cursor on the **PARAMETER WRITE** line.
- Enter figure 1 over NC Keyboard.

☐ **Note :**
If the parameter is 1 when the machine is turned on, a System Alarm Class 2 appears: WRITE PROTECT.

- Press CAN and RESET keys in NC board together to clear the alarm.
- Proceed likewise to reset the parameter to 0.

9.3 PART MANIPULATOR MDI CONTROL

PART MANIPULATOR MDI CONTROL

☐ **Note :**
The MDI mode with its ISO code is in no way related to the AUTO (MEM) mode with its TABLE operation, which is to say the MDI mode operates differently.

SEQUENCE	NOTES
	• Select MDI mode with Mode Selector.
	• Select CHANNEL 1 with Axis / Channel Selector.

Continue the operating sequence by entering the following functions :

M160	Advance manipulator
M162	Swing manipulator out
M164	Close manipulator gripper
M163	Swing manipulator in
M161	Retract manipulator
M165	Open manipulator gripper
M166	Advance manipulator to guidebush
M167	Retract manipulator to backwork gang
M168	Check part absence in manipulator gripper jaws / cage
M169	Check part presence in manipulator gripper jaws / cage

☐ **Notes :**

M162 manipulator will not swing out (M162) without M160 entered first.

M161 manipulator will not retract (M161) without M163 entered first.

M168 controls jaws or cage as applicable, the sensing states being :

0 for jaws

1 for cage

Therefore enter over MDI :

D450.0 with **1** for jaws

D450.0 with **0** for cage

The D450.0 will retain the jaws or cage state (as entered) when the machine is switched off.

The control can be disabled by activating the following keep-relays :

K8.0 = **1** disables **X2.0** manipulator control (manipulator not swung out)

K8.1 = **1** disables **X2.2** manipulator control (part in jaws or cage closed)

9.3.2 Device For Monitoring Part Presence In Manipulator Gripper Jaws

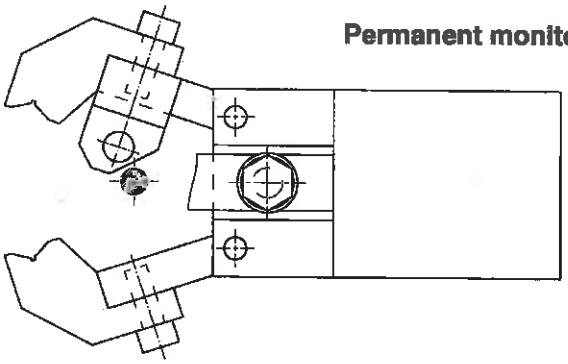

Permanent monitoring

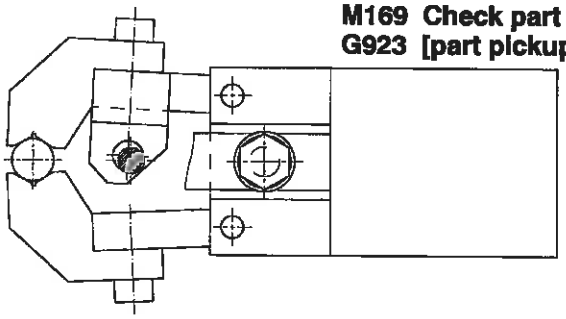

M169 Check part presence in jaws
G923 [part pickup]

M168 Check part absence in jaws
G912 [feeding]

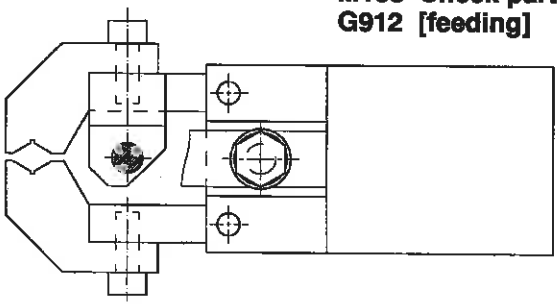

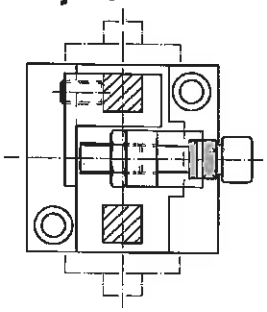

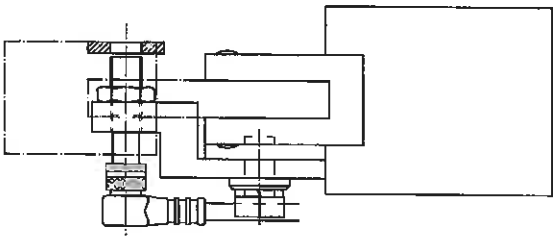

Alarm 2032: FAULT MANIPULATOR If the monitoring system gives this alarm, proceed as follows :	
Cause	**Remedy**
• Manipulator not swung out • Part absence	Eliminate the fault(s) and press **F3** to clear the alarm. (**F3** pushbutton on Control Panel AR90) **F3**

9.4 SENSOR

SET SENSOR	
To set the sensor follow this sequence :	
SEQUENCE	**NOTES**
	• Press POS key.
	or
	• Press CUSTOM key (you must be in Channel 1).
[SENS]	• Press **SENS** softkey at the bottom of NC Screen to display :

```
MDI - MODE                                          O0001    N00000

 SENSOR

SENSOR 1  -          0

SENSOR 2  -          0

SENSOR 3  -          0

FEED  OVE    100%                    SPIND  OVE  100%
                                                      5      0 T0000
 MDI  ****      ***                       10 : 25 : 37        CHAN 1
***
[          ]  [          ]  [          ]  [          ]  [          ]
```

SENSOR 1 : when active, changes states from 0 to 1 or from 1 to 0 according the sensor type used.

SENSOR 2 : when active, changes states from 0 to 1 or from 1 to 0 according the sensor type used.

SENSOR 3 : when active, changes states from 0 to 1 or from 1 to 0 according the sensor type used.

Mechanical Sensor		
CODE	**CHANNEL**	**FUNCTION**
M32	C1	Enable **tool breakage check** with Sensor 1. If no tool is sensed, Alarm TOOL BREAKAGE SENSOR 1 is displayed.
M33	C1	Enable **part presence check** with Sensor 1. If no tool is sensed, Alarm PART PRESENCE SENSOR 1 is displayed.
M34	C1	Enable **tool breakage check** with Sensor 2. If no tool is sensed, Alarm TOOL BREAKAGE SENSOR 2 is displayed.
M35	C1	Enable **part presence check** with Sensor 2. If no tool is sensed, Alarm PART PRESENCE SENSOR 2 is displayed.
M36	C1	Enable **tool breakage check** with Sensor 3. If no tool is sensed, Alarm TOOL BREAKAGE SENSOR 3 is displayed.
M37	C1	Enable **part presence check** with Sensor 3. If no tool is sensed, Alarm PART PRESENCE SENSOR 3 is displayed.

9.5 MDI CONTROL FOR THRU-PICKOFF-SPINDLE FLUSH COOLANT

M886 : enables Output Y0004.5
disables Output Y0004.5 in **2 s**

9.6 ADDITIONAL M-FUNCTIONS FOR MDI

M887 : enables Output Y 0004.3.
disables Output Y 0004.3 in **2 s.**

M888 : enables Output Y 0004.1.
disables Output Y 0004.1 in **2 s.**

M889 : enables Output Y 0005.6.
disables Output Y 0005.6 in **2 s.**

M890 : enables Output Y 0005.4.
M891 : disables Output Y 0005.4.

M892 : enables Output Y 0005.2.
M893 : disables Output Y 0005.2.

M894 : enables Output Y 0005.0.
M895 : disables Output Y 0005.0.

9.8 15-BAR PUMP CONTROL

TURNING 15-BAR PUMP ON / OFF

in AUTO mode :

ON : with **M08** (Coolant On) and **M45** (HP pump On).

OFF : with **M46** (HP pump Off) or with **M09** (Coolant Off) or CYCLE STOP or SETTING mode.

in MDI mode :

ON : with **M08** (Coolant On) and **M45** (HP pump On) in Channel 1.

OFF : with **M46** (HP pump Off) in Channel 1 or with **M09** (Coolant Off).

9.8.1 Disable M45 HP-Pump-On Function

DISABLE M45 HP-PUMP-ON FUNCTION	
To start with :	**You must be in AUTO mode, Program INIT (O01)**
SEQUENCE	**NOTES**
	• Press CYCLE STOP to interrupt program run.
	• Press POS key. **or** • Press CUSTOM GRAPH key.
	• Press PAGE RIGHT softkey at the bottom of NC Screen.
[PARAM]	• Press this softkey at the bottom of NC Screen to display :

```
AUTO - MODE                                        O0002    N01234
                    MACHINE PARAMETERS
MACHINE NO.                                          0
COOLANT MONITORING                                   OFF
FUNCTION M894                                        OFF
FUNCTION M45                                         OFF
MANIPULATOR FUNCTION                                 OFF
MANIP. NOT SWUNG OUT      X2.0                       OFF
PART IN COLLET            X2.2                       OFF

FEED OVE  100%                SPIND OVE  100%
NUM=
 MEM  ****  ***  ***          08 : 13 : 09            CHAN 1
[ CM ON ]    [ CM OFF ]    [ M894OF ]  [ MANOFF ]   [ M45OFF ]
```

[M45OFF]	• Press this softkey at the bottom of NC Screen to disable M45.
Note : Whenever you press RESET, the M45-function is re-enabled.	

10. CUSTOMER PAGES

10.1 DISPLAY END-OF-BAR

DISPLAY END-OF-BAR	
To display End-of-Bar follow this sequence :	
SEQUENCE	**NOTES**
	• Press POS key.
or	
	• Press CUSTOM key.
[BAR]	• Press this softkey at the bottom of NC Screen.
In regular operation, i.e. when no End-of-Bar is sensed, the following customer page opens :	

```
AUTO - MODE                                          O0002  N01365

END-OF-BAR

INACTIVE

INPUT END-OF-BAR  X.......  -  INACTIVE-

FEED  OVE  100%          SPIND  OVE  100%
                                                     5     0    T0000

MDI  ****  ***  ***                08 : 20 : 38            CHAN 1
[          ]  [          ]  [          ]  [          ]  [          ]
```

10.2 CHECK MACHINE NO. (ALARM 1006: WRONG MACHINE)

CHECK MACHINE No.	
To check if the program downloaded corresponds to the machine concerned, follow this sequence :	
SEQUENCE	**NOTES**
	• Press POS key. **or** • Press CUSTOM key.
	• Press PAGE RIGHT softkey at the bottom of NC Screen.
[PARAM]	• Press this softkey at the bottom of NC Screen to display :

```
MODE - MDI                                          O0001    N00000

MACHINE PARAMETERS

MACHINE NO                                                   61757

COOLANT MONITORING                                           OFF

MANIPULATOR OPERATION                                        ON
MANIP. NOT SWUNG OUT      X2.0                               OFF
CAGE CLOSED               X2.2                               ON

FEED  OVE  100%                 SPIND  OVE  100%
                                                        S   0  T0000
 MDI  ****  ***  ***            16 : 32 : 08             CHAN 1
[ CM ON ]    [ CM OFF ]   [          ]   [ MANOFF ]   [          ]
```

	Enter Machine No over NC Keyboard : **e.g.** • Enter 61757 and press INPUT key.

☐ **Notes :** If the machine number in the program downloaded does not correspond to the machine number entered in this page the machine will stop on starting the program and Alarm 1006: **WRONG MACHINE** will be displayed.

If the machine number in the program downloaded is 0 the machine number entered in this page is not checked.

If the machine number entered in this page is 0 the machine number in the program downloaded is not checked.

10.4 DISPLAY CRASH PAGE

DISPLAY CRASH PAGE	
To display Crash Page follow this sequence :	
SEQUENCE	**NOTES**
	• Press POS key. **or** • Press CUSTOM key.
	• Press PAGE RIGHT softkey at the bottom of NC screen.
[CRASH]	• Press this softkey at the bottom of NC screen to open this page :

```
MODE - MDI                                    O0001    N00000

CRASH RISK X4-Z4                              0.0001 MM

GEOMETRY Z T5X MAXIMUM                              0

POSITION Z4 - RISK                            1000000
POSITION X4 - RISK                            5420000


FEED  OVE  100%                SPIND  OVE  100%
NUM=
                                              S     0    T0000
 MDI  ****  ***  ***           16 : 32 : 08            CHAN 1
[          ]  [          ]  [          ]  [          ]  [          ]
```

GEOMETRY Z T5X MAXIMUM : Enter the difference between your tool geometry and the maximum geometry.
This value will be included in the anti-crash safety barrier.

10.6 DISPLAY MACRO SOFTWARE NO.

DISPLAY MACRO SOFTWARE No.	
To display Macro Software No. follow this sequence :	
SEQUENCE	**NOTES**
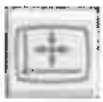	• Press POS key. **or** • Press CUSTOM key.
	• Press PAGE LEFT softkey at the bottom of NC screen.

```
MODE - AUTO                                          O0002  N00000

        TORNOS - BECHLER

        DECO 20 - 26

                TORNOS - BECHLER SA
                CH - 2740 MOUTIER

MACRO TB V01.......


FEED  OVE  100%          SPIND  OVE  100%

MDI  ****  ***  ***                                        CHAN 1
[   M01   ] [   STOP   ] [   M20   ]  [  BAR  ]     [   SENS   ]
```

TB Macro Software No. is V01.....

10.8 EDIT CNC TIME AND DATE

EDIT CNC TIME AND DATE	
SEQUENCE	**NOTES**
	• Select MDI mode with Mode Selector.
	• Press once or more times OFFSET SETTING key in NC Keyboard until SETTING page appears.
or	• Press Page UP or Page DOWN key to select Page: SETTING (TIMER)
	• Press to go to the heading to edit.

```
SETTING (TIMER)                                                    O0001    N00000

PARTS TOTAL                =                          0
PARTS REQUIRED             =                          0
PART COUNT                 =                          0

POWER ON                   =              105H        40M
OPERATING TIME             =               0H         0M          0S
CUTTING TIME               =               0H         0M          0S
FREE PURPOSE (PMC)         =               0H         0M          0S
CYCLE TIME                 =               0H         0M          0S
                   DATE    =             1997/03/20
                   TIME    =             15:45:28
>_
MDI  ****  ***  ***          15:45:28                                CHAN 1
[ OFFSET ]         [ SETING ]          [        ]   [        ]    [ OPRT ]
```

11. MAINTENANCE PAGES

Maintenance Pages display listed maintenance works scheduled for good operation of the machine.

- Use the PAGE UP / DOWN keys / to turn the maintenance pages.
- Quit the maintenance pages when you no longer need them.
  Otherwise, the other menus will be unaccessible.

  For this, go to the last page and press the **[QUIT]** softkey.

Note : The machine operating hours' counter is not active unless the coolant is switched on, i.e. the machine produces.

Attention ! Follow strictly directions given in Operating Instructions 300401 / 300441: INSTALLATION – OPERATION – MAINTENANCE.

11.1 MAINTENANCE EVERY 500, 1500 AND 2500 HOURS' OPERATION

Every 500, 1500 and 2500 hours' operation the following texts are displayed :

1 – 2

TO AVOID ANY MALFUNCTION OF THE MACHINE,
FOLLOW STRICTLY DIRECTIONS GIVEN
IN THE OPERATING INSTRUCTIONS.

IN THE NEXT PAGES, YOU WILL FIND LISTED
THE MAINTENANCE WORKS TO PERFORM.

- Press the PAGE DOWN key :

2 – 2

- CLEAN OR CHANGE THE AIR FILTERS OF THE CONTROL CABINET.

11.3 MAINTENANCE EVERY 3000 HOURS' OPERATION

Every 3000 hours' operation the following texts are displayed :

1 - 2

TO AVOID ANY MALFUNCTION OF THE MACHINE,
FOLLOW STRICTLY DIRECTIONS GIVEN
IN THE OPERATING INSTRUCTIONS.

IN THE NEXT PAGES, YOU WILL FIND LISTED
THE MAINTENANCE WORKS TO PERFORM.

- Press the PAGE DOWN key :

2 - 3

- CLEAN OR CHANGE AIR FILTERS OF THE CONTROL CABINET.
- CHANGE CUTTING OIL.
- CLEAN SUCTION FILTER.

- Press the PAGE DOWN key :

3 - 3

- CHECK CONDITION AND TENSION OF TIMING BELTS.
- CLEAN LUBRICANT FLOWRATE SENSOR.
- GREASE GUIDES AND BALLSCREWS.

- Press the PAGE DOWN key :

4 - 4

- CLEAN THE ENTIRE MACHINE.
- CHANGE MICRO-RELAYS.

TORNOS BECHLER

SPARE PARTS

DECO 2000

20mm-CAPACITY

ATTENTION !

Before handling the machine, read first the information contained in the leaflet entitled "SAFETY REGULATIONS"

TORNOS-BECHLER S.A.
CH-2740 MOUTIER / Suisse
Internet: http://www.tornos.ch

Printed in Switzerland

TABLE OF CONTENTS

1.1	FRAME (306001)	1
1.2	Z1 CARRIAGE (306037)	2
1.3	HEADSTOCK (306004)	3
1.4	HEADSTOCK (306029)	4
1.5	S1-SPINDLE DRIVE (306003) "SERIES 1 UP TO 13"	5
1.6	S1-SPINDLE DRIVE (306003) "FROM SERIES 14 UP"	6
1.7	X1/Y1 CROSS SLIDE (306006)	7
1.8	X2/Y2 CROSS SLIDE (306007)	9
1.9	S2-SPINDLE DRIVE (306035)	11
1.10	X3 CARRIAGE FOR END ATTACHMENT (306008)	13
1.11	Z3 CARRIAGE FOR END ATTACHMENT (306010)	15
1.12	X4 CARRIAGE COUNTER-HEADSTOCK (306012)	16
1.13	X3 CARRIAGE FOR END ATTACHMENT (306013)	17
1.14	ADAPTATION COUNTER-HEADSTOCK (306015)	21
1.15	COUNTER-HEADSTOCK DRIVE (306014)	22
1.16	MANIPULATOR (306017)	24
1.17	MANIPULATOR PNEUMATICS (306018)	26
1.18	STANDARD PNEUMATICS (306021)	27
1.19	COUNTER-SPINDLE PNEUMATICS (306022)	28
1.20	END ATTACHMENT GUARDS (306056)	29
1.21	COUNTER-HEADSTOCK CARRIAGE GUARDS (306058)	30
1.22	GUIDEBUSH COOLANT (306057)	32
1.23	REVOLVING GUIDEBUSH (306028)	33
1.24	GUIDEBUSH DRIVE (306027)	34

TORNOS BECHLER

1.1 FRAME (306001)

Item		Designation	No.
010	*475242	Shock absorber	2

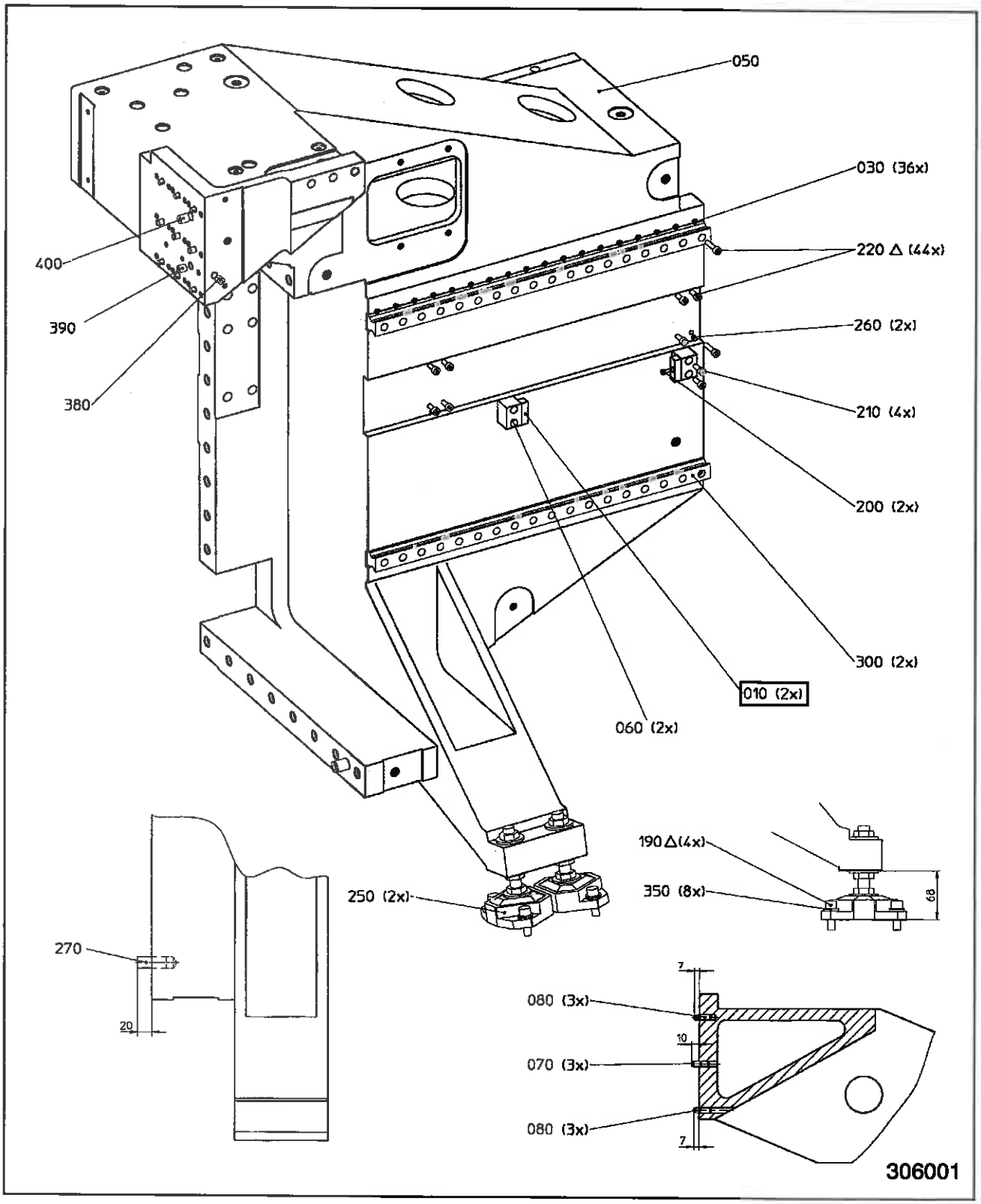

TORNOS BECHLER

1.3 HEADSTOCK (306004)

Item		Designation	No.
510	*217192	with 561515 O-Ring 1,78 x 1,78	1
520	*217193	with 561514 O-Ring 3,79 x 1,78	4

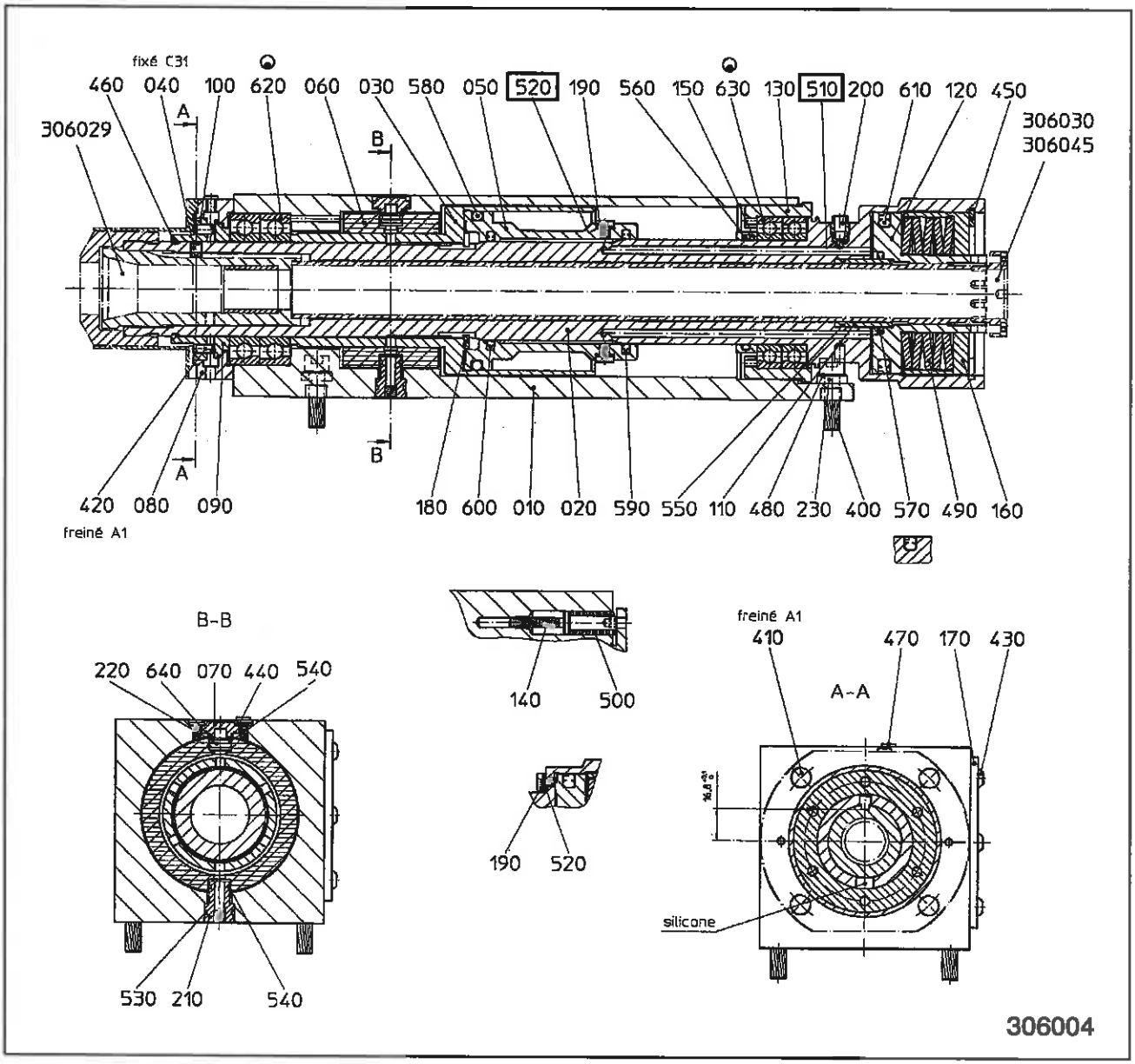

TORNOS BECHLER

1.5 S1-SPINDLE DRIVE (306003) "SERIES 1 UP TO 13"

Item		Designation	No.
280	*203751	Ball Bearing SKF: 6001-2Z / Springer AG: 6001-XZZ / FAG: 6001-X2ZR	2
310	216466	Belt Syncroflex 6/T5/150	1
320	**216917	Belt Syncroflex 16/T10/1150 (without live guidebush)	2
320	*216917	Belt Syncroflex 16/T10/1150 (without live guidebush)	2

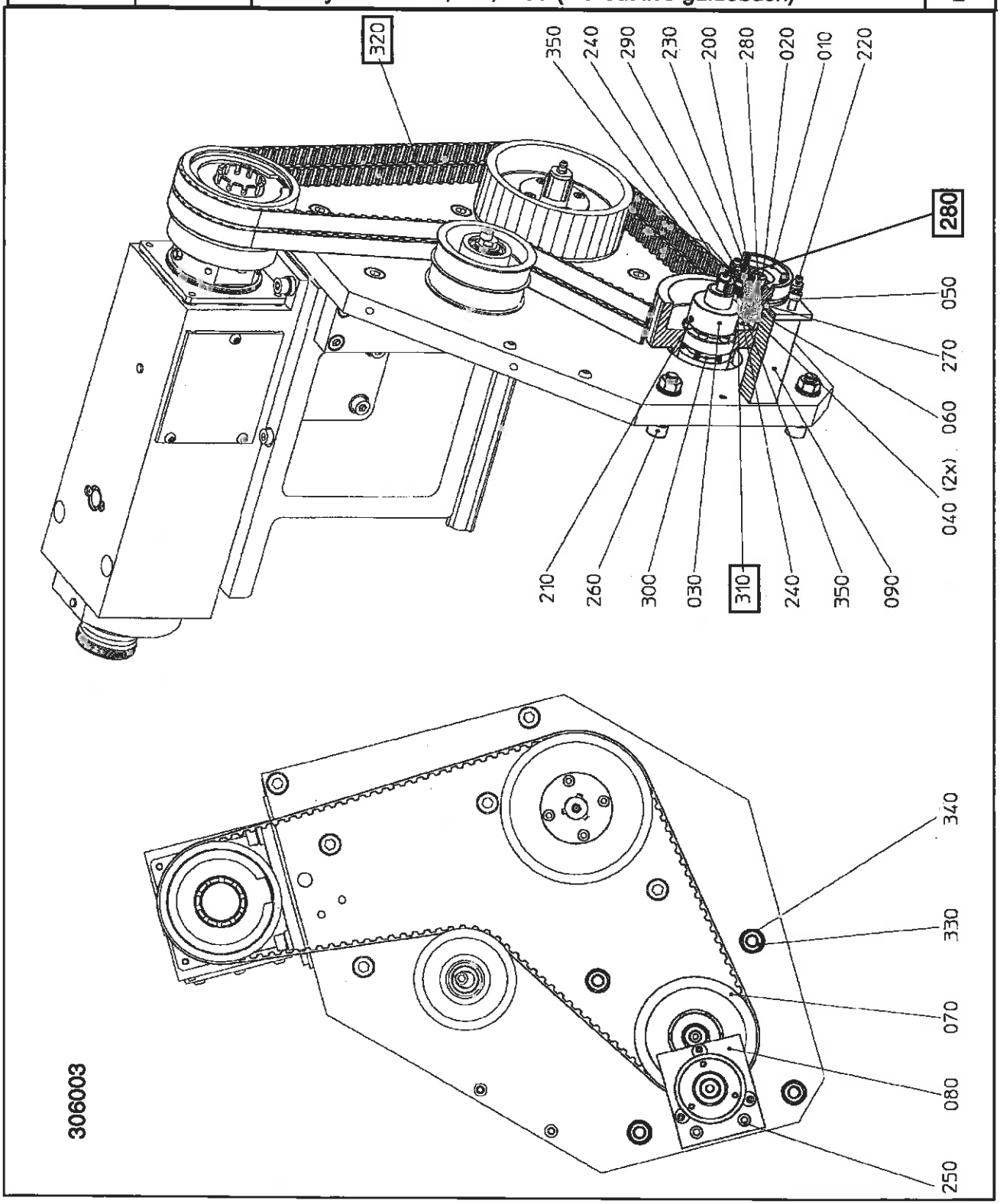

TORNOS BECHLER

1.7 X1/Y1 CROSS SLIDE (306006)

Item		Designation	No.
160	*475242	Shock absorber	4
310	*216924	Wiper Hennig	2
320	216431	Belt Syncroflex 16 / T5 / 305	1
330	213184	Belt Syncroflex 16 / T5 / 355	1

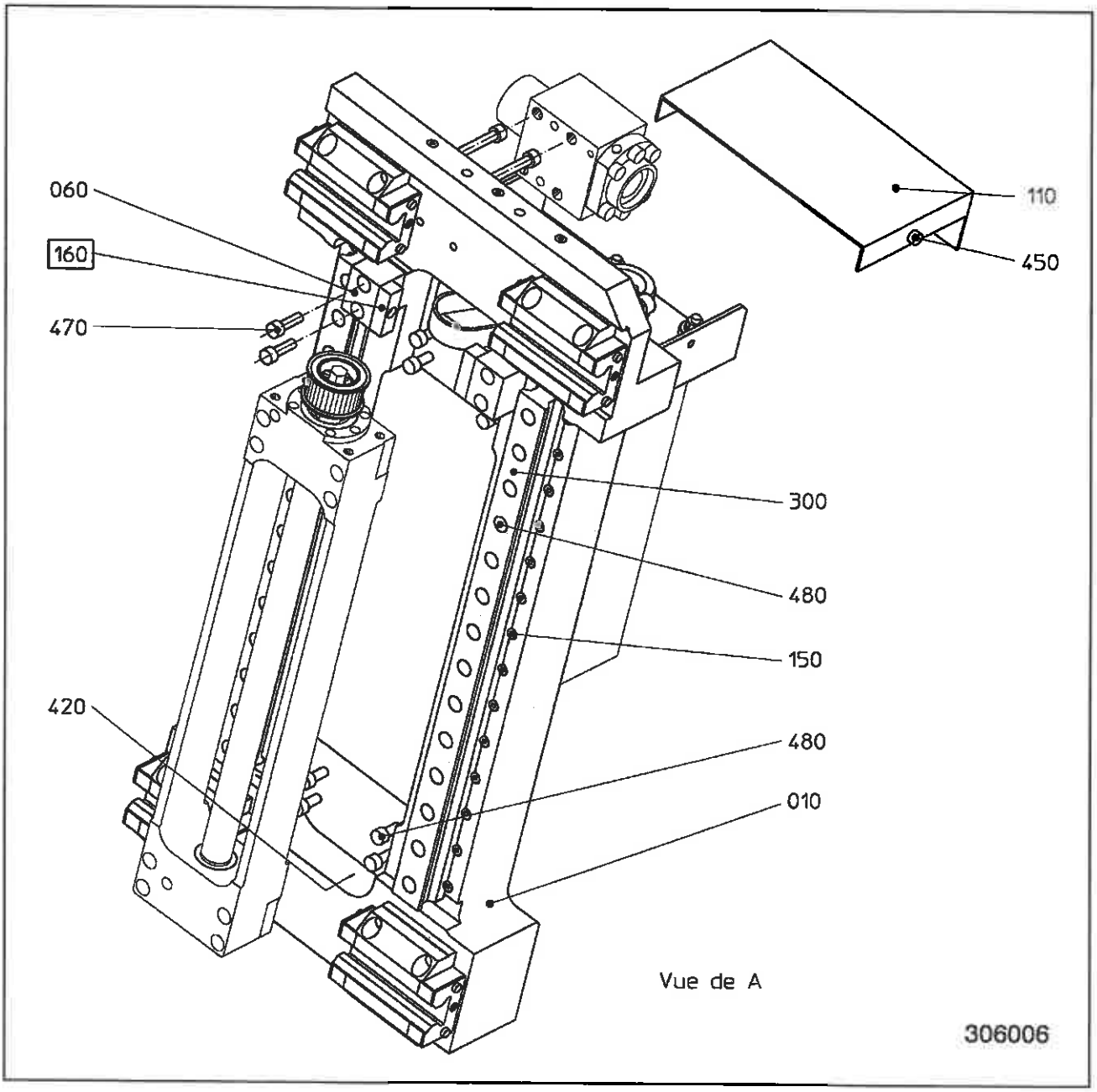

TORNOS BECHLER

1.8 X2/Y2 CROSS SLIDE (306007)

Item		Designation	No.
160	*475242	Shock absorber	4
310	*216924	Wiper Hennig	2
320	214581	Belt Syncroflex 16 / T5 / 690	1
330	213184	Belt Syncroflex 16 / T5 / 355	1

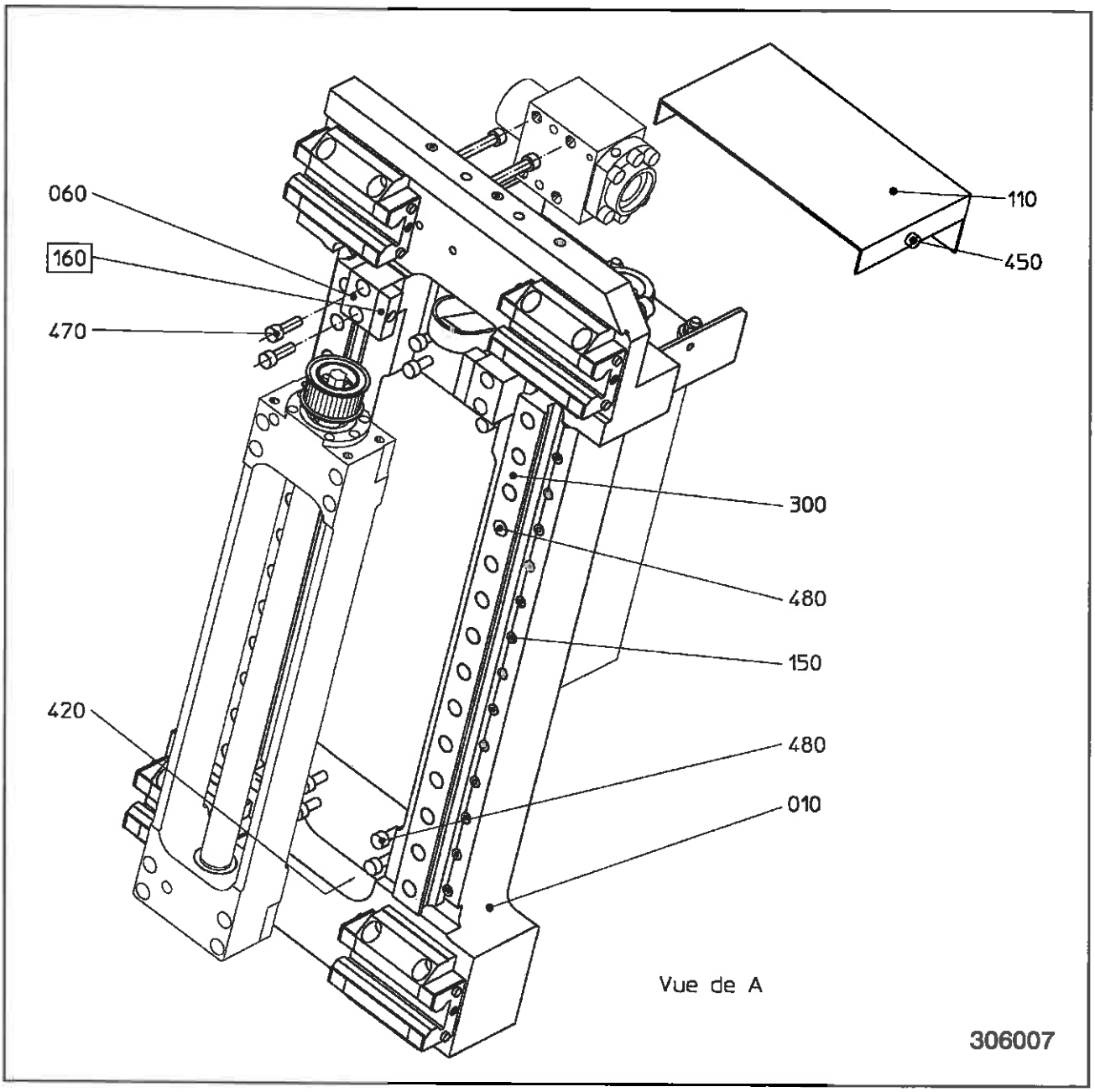

1.9 S2-SPINDLE DRIVE (306035)

Item		Designation	No.
400	*202023	Grooved ball bearing SKF 6004-2RZ FAG 6004-2RSD	3
510	**216951	Belt Syncroflex 32 / T5 / 1315	1
510	*216951	Belt Syncroflex 32 / T5 / 1315	1
520	**216952	Belt Syncroflex 25 / T5 / 400	1
520	*216952	Belt Syncroflex 25 / T5 / 400	1
530	*216954	Grooved ball bearing SKF 6001 2RZ	10

TORNOS BECHLER

1.10 X3 CARRIAGE FOR END ATTACHMENT (306008)

Item		Designation	No.
010	*475242	Shock absorber	2
300	213184	Belt Syncroflex 16 / T5 / 355	1

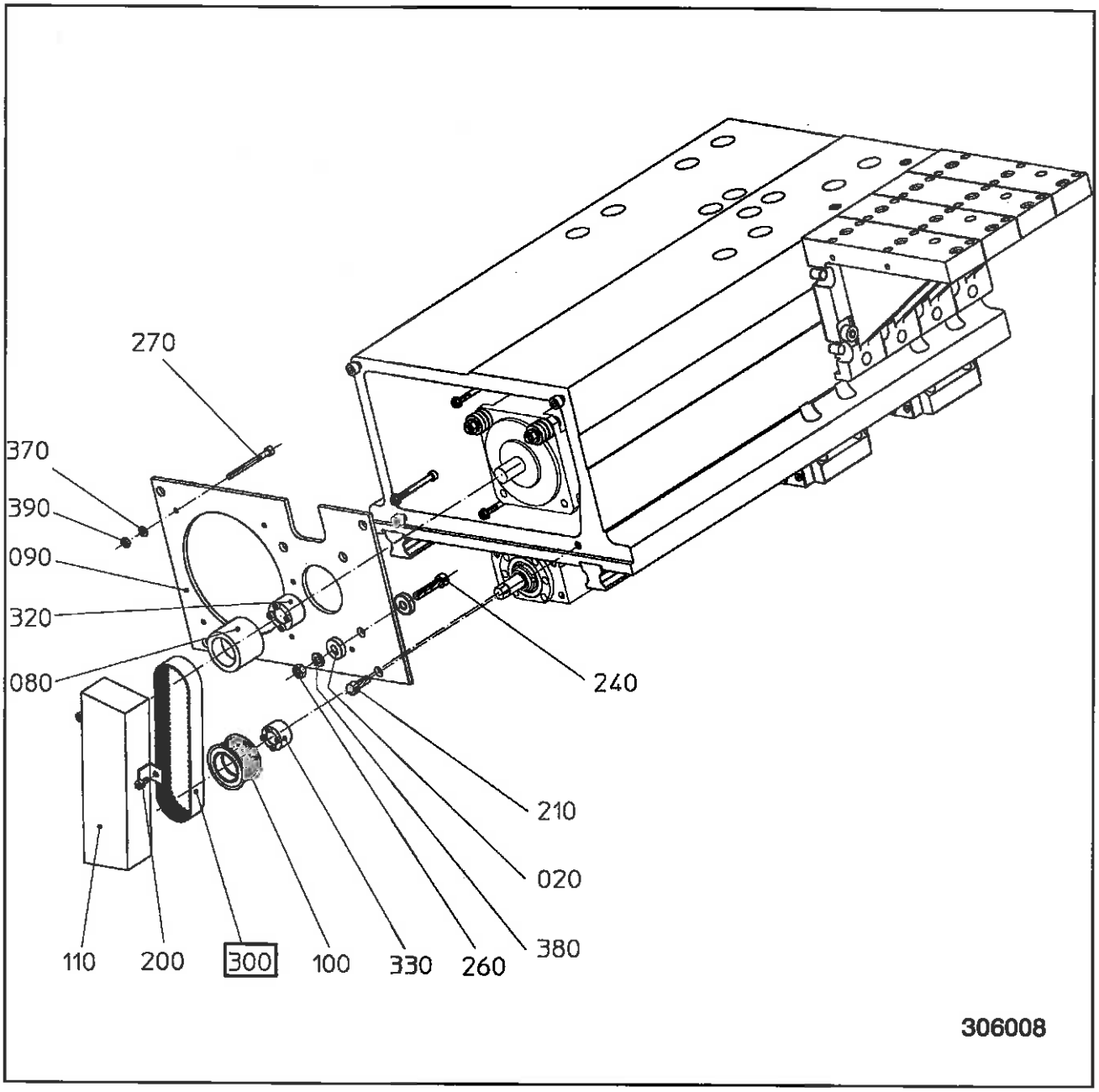

TORNOS BECHLER

1.11 Z3 CARRIAGE FOR END ATTACHMENT (306010)

Item		Designation	No.
190 *	214582	Belt Syncroflex 16 / T5 / 545	1
191 **	215037	Belt Syncroflex 16 / T5 / 575	1

* = As from series 2

** = Up to series 1

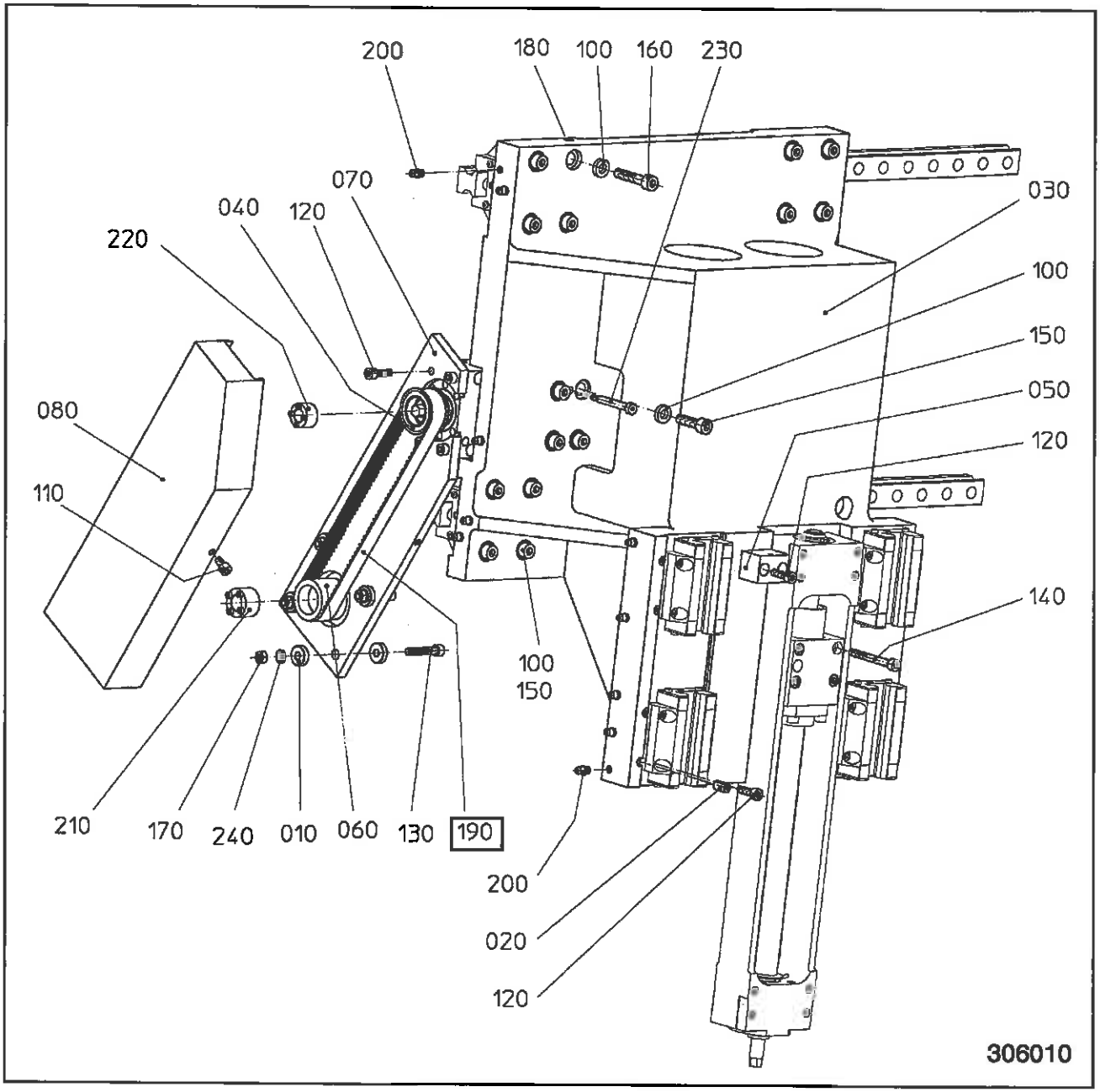

TORNOS BECHLER

1.13 X3 CARRIAGE FOR END ATTACHMENT (306013)

Item		Designation	No.
070	*475242	Shock absorber	2
330	215067	Belt Syncroflex 16 / T5 / 420	1
350	216486	Belt Syncroflex 16 / T5 / 620	1

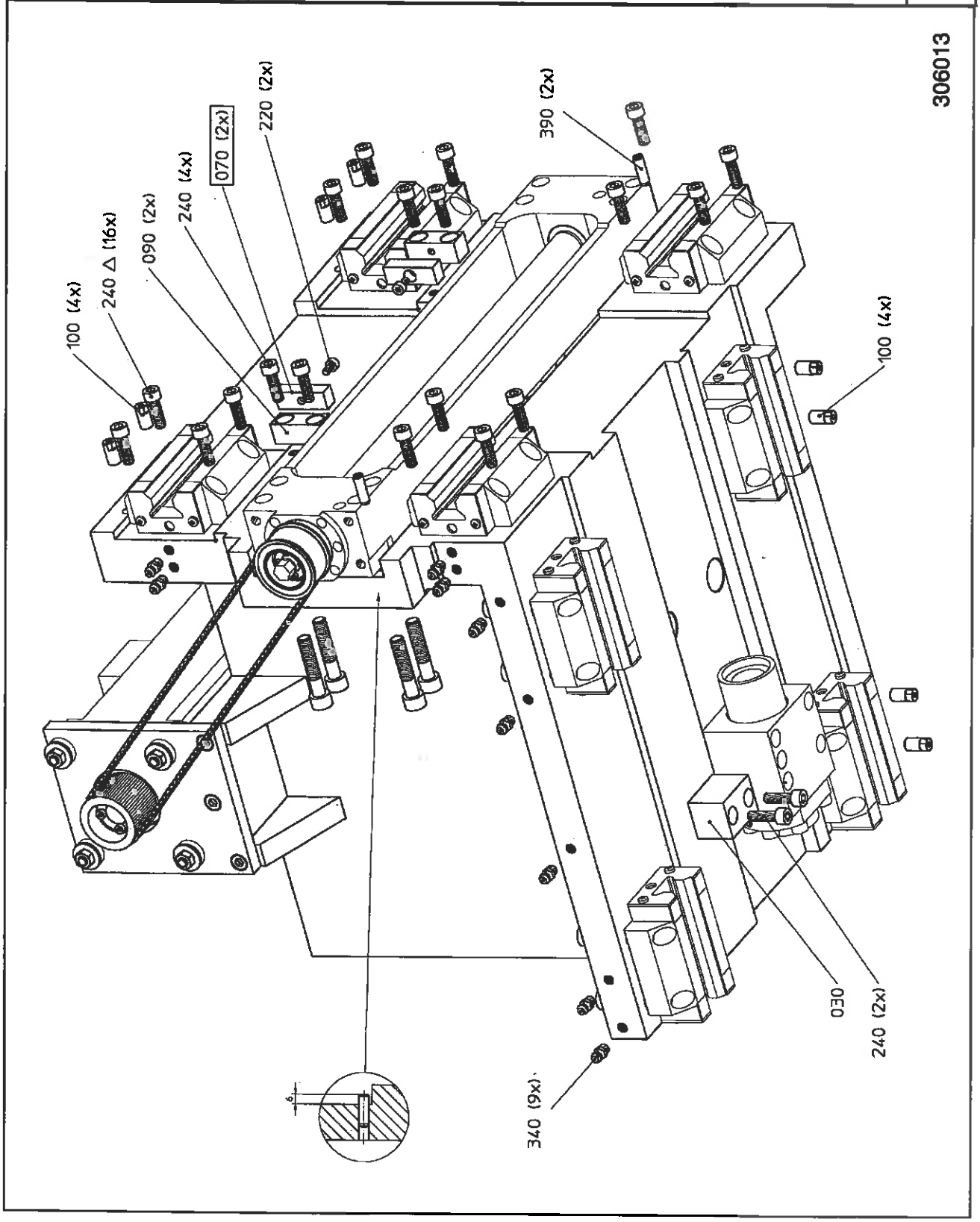

TORNOS BECHLER

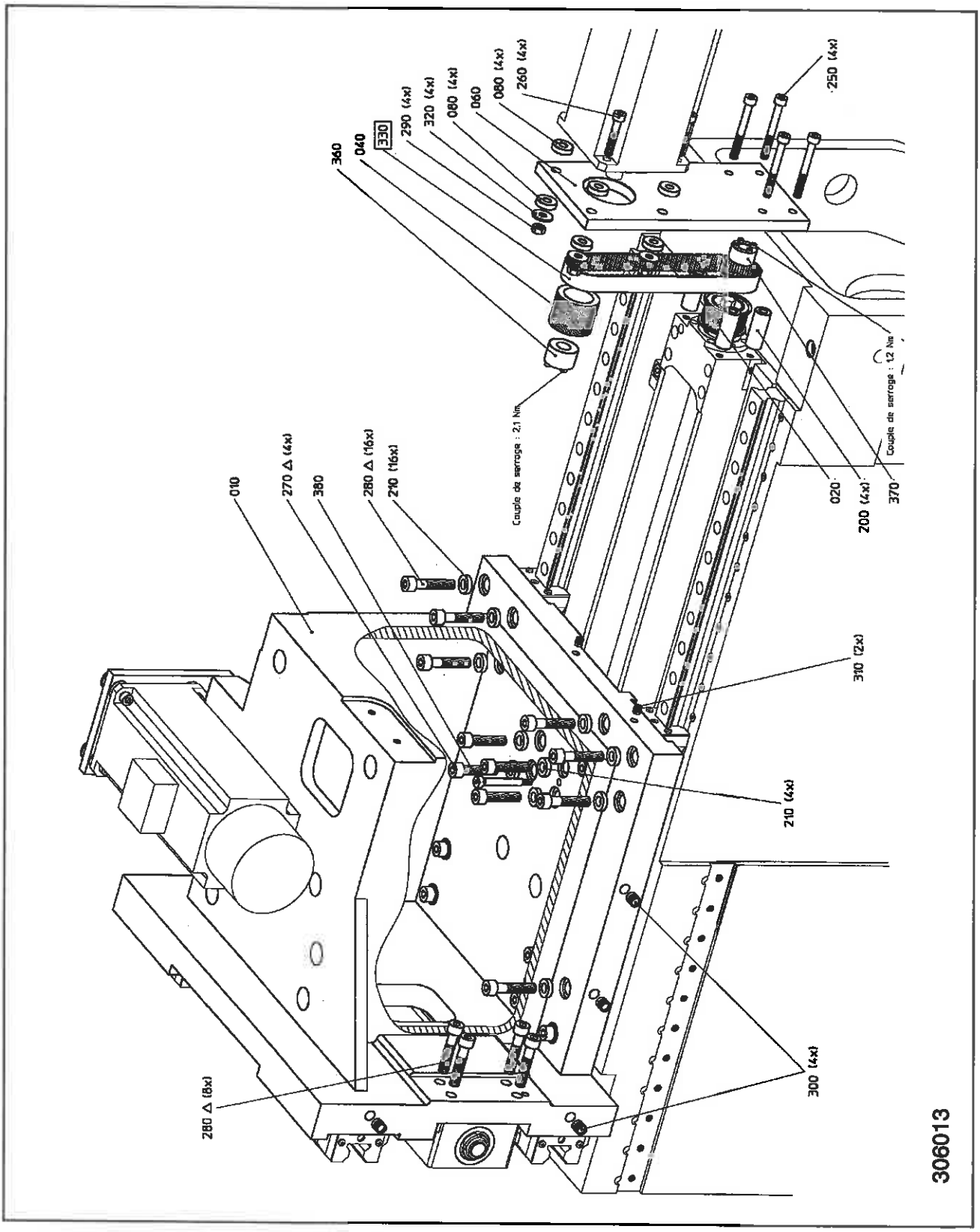

TORNOS BECHLER

1.15 COUNTER-HEADSTOCK DRIVE (306014)

Item □		Designation	No.
280	*202023	Grooved ball bearing SKF 6004-2RZ FAG 6004-2RSD	2
310	**211028	Belt Syncroflex 16 / T10 / 920	1
310	*211028	Belt Syncroflex 16 / T10 / 920	1
330	**213900	Belt Syncroflex 25 / T5 / 575	1
330	*213900	Belt Syncroflex 25 / T5 / 575	1
350	*216156	Deep-groove ball bearing SKF 6002 2RZ	2

TORNOS BECHLER

1.16 MANIPULATOR (306017)

Item ▭		Designation	No.
590	*214809	Collet MARTONAIR M/60310	1
630	*216161	Double-acting cylinder(ISO6432)FESTO DSNU-25-160-PPV-A	1
640	*216999	Double-acting cylinder(ISO6432)FESTO DSNU-25-600-PPV-A	1
650	217000	Double-acting cylinder(ISO6432)FESTO DSNU-25-125-PPV-A	1
800	*217066	Ball bush STAR 0733-220-45	4
810	*217067	Wiper STAR 1331-720-50	4
830	217069	Open-ring bush D.20 INA PABO 2045 PP AS	2
870	*214810	Hydraulic shock absorber ENIDINE Pro 25 MC-3 B	2

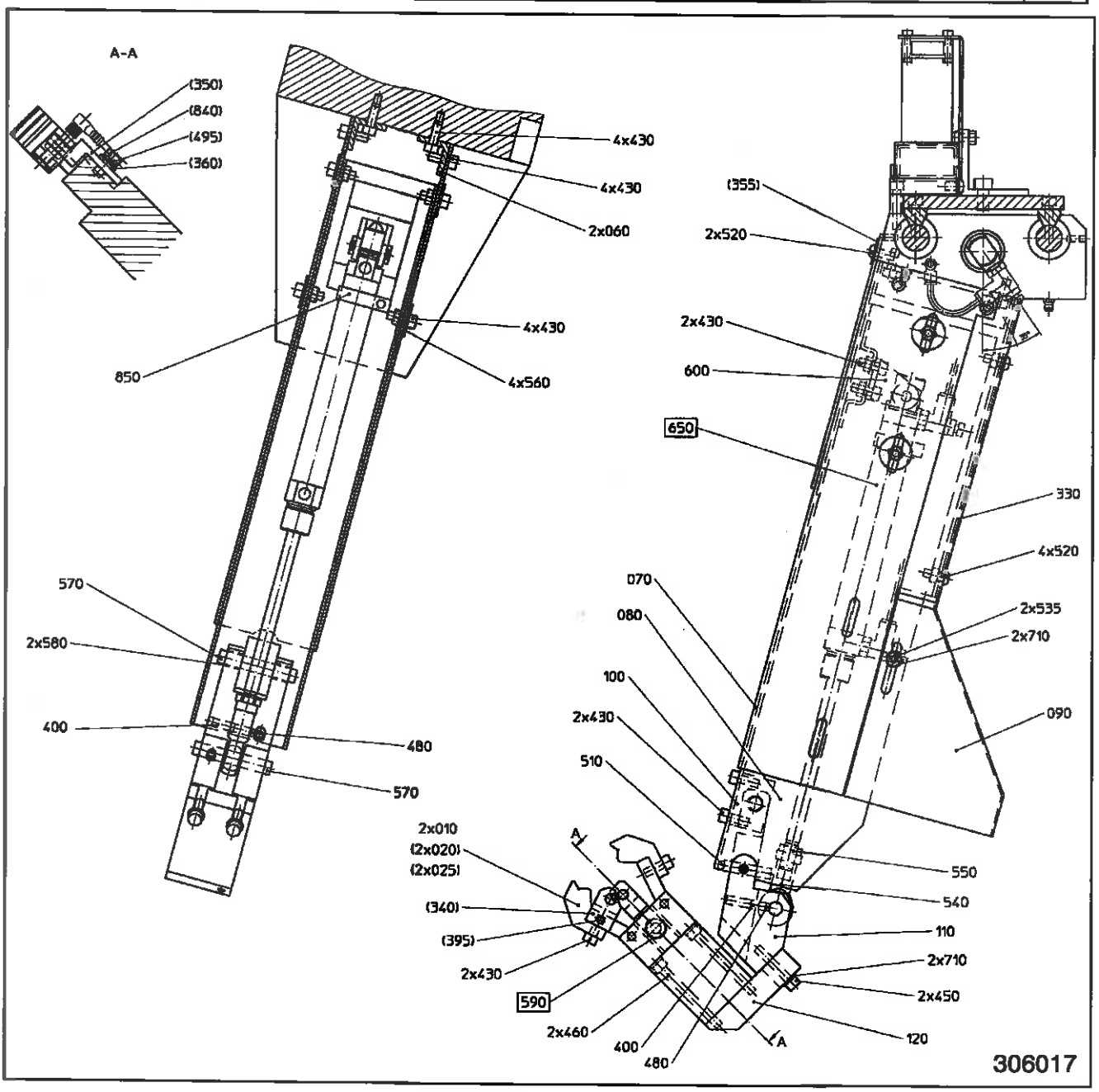

TORNOS BECHLER

1.17 MANIPULATOR PNEUMATICS (306018)

Item □		Designation	No.
010	216509	Distributor 5/2 monostable 24V BOSCH Nº 0 820 038 052	4
030	*217011	Adjustable flow regulator FESTO GRLA-1/8-QS-4	7

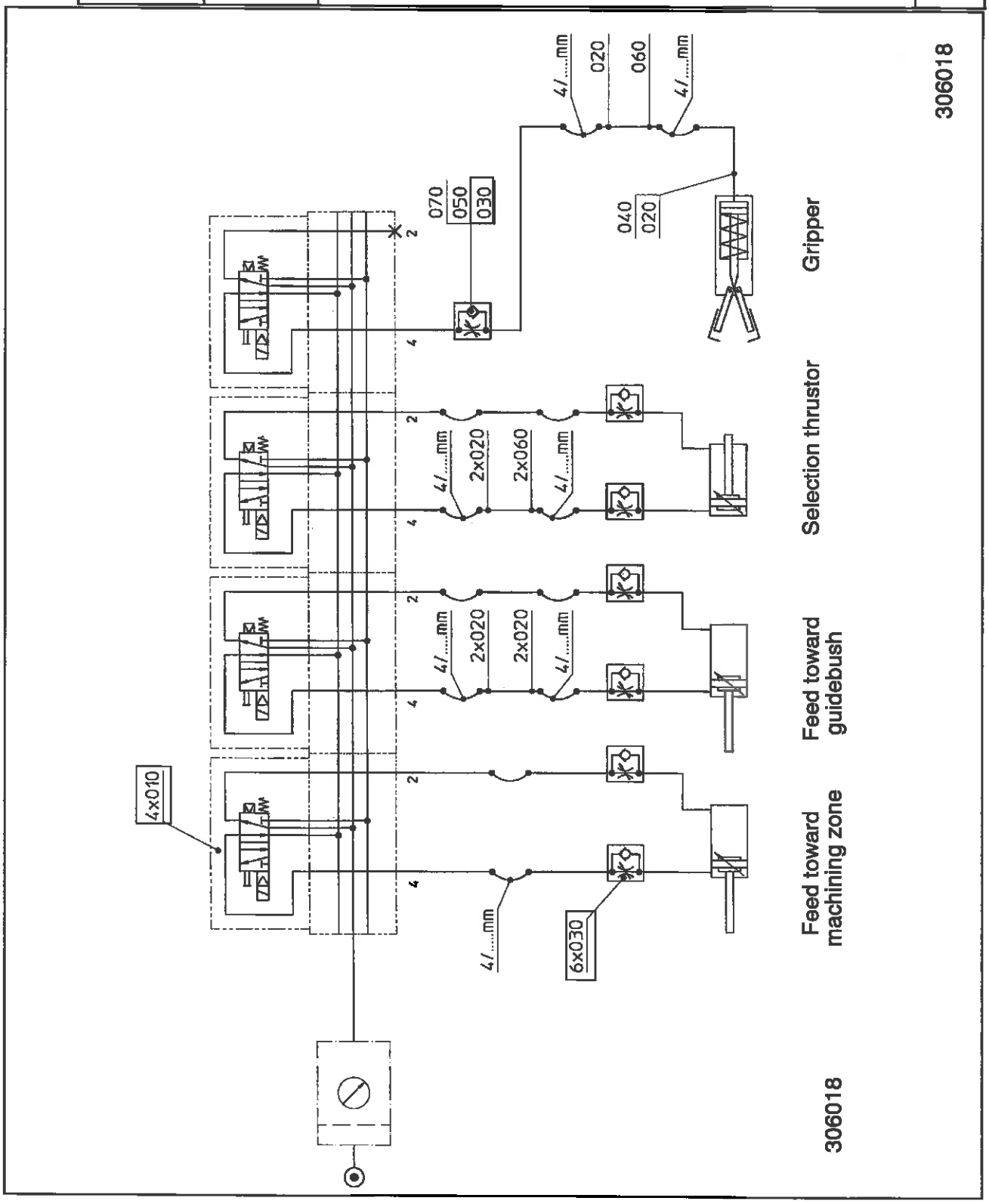

TORNOS BECHLER

1.19 COUNTER-SPINDLE PNEUMATICS (306022)

Item □		Designation	No.
100	216509	Distributor 5/2 monostable 24V BOSCH № 0 820 038 052	1

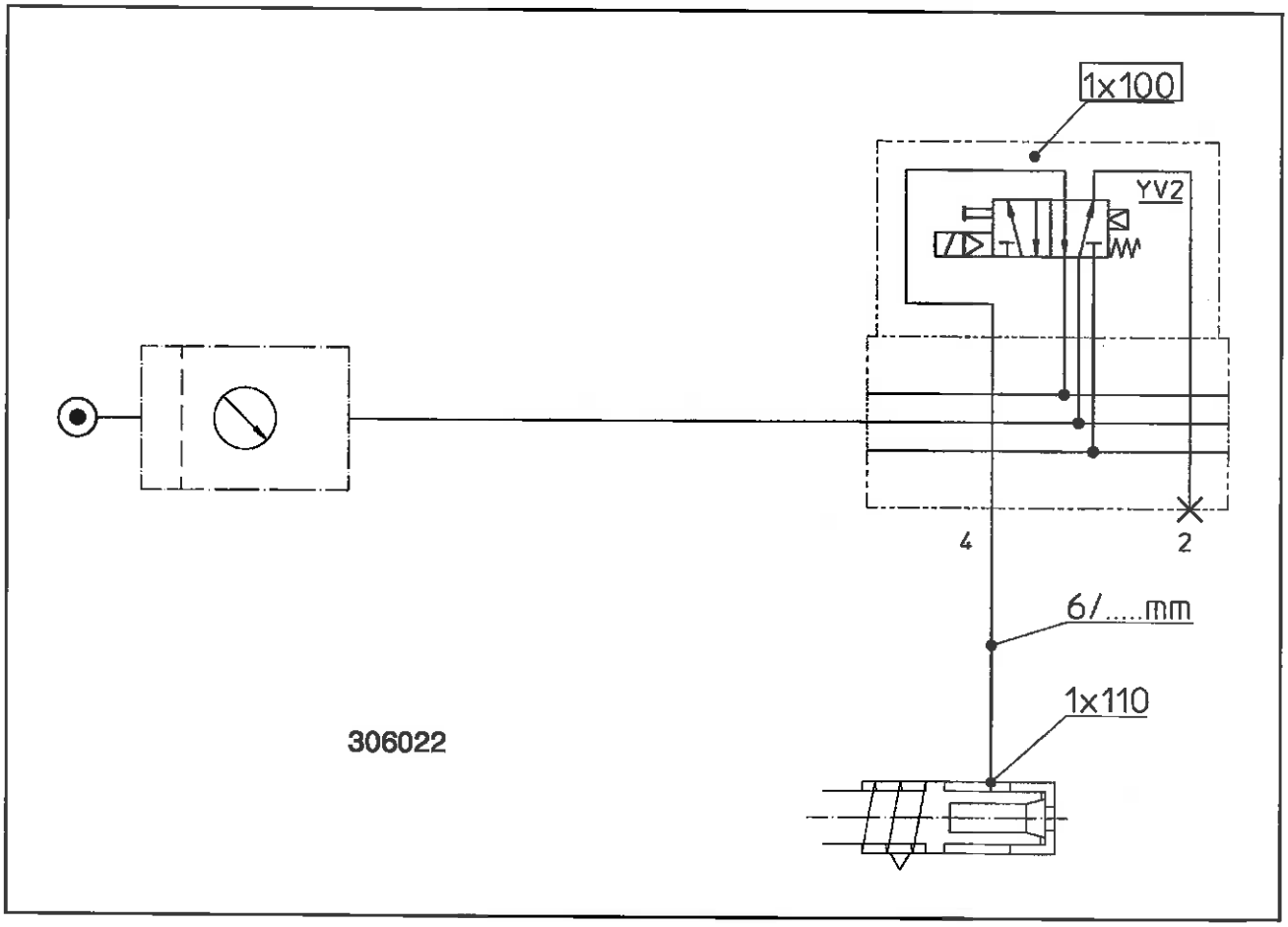

TORNOS BECHLER

1.21 COUNTER-HEADSTOCK CARRIAGE GUARDS (306058)

Item □		Designation	No.
090	562175	Support	1
350	*217012	Wiper Hennig type AB 1 straight	1

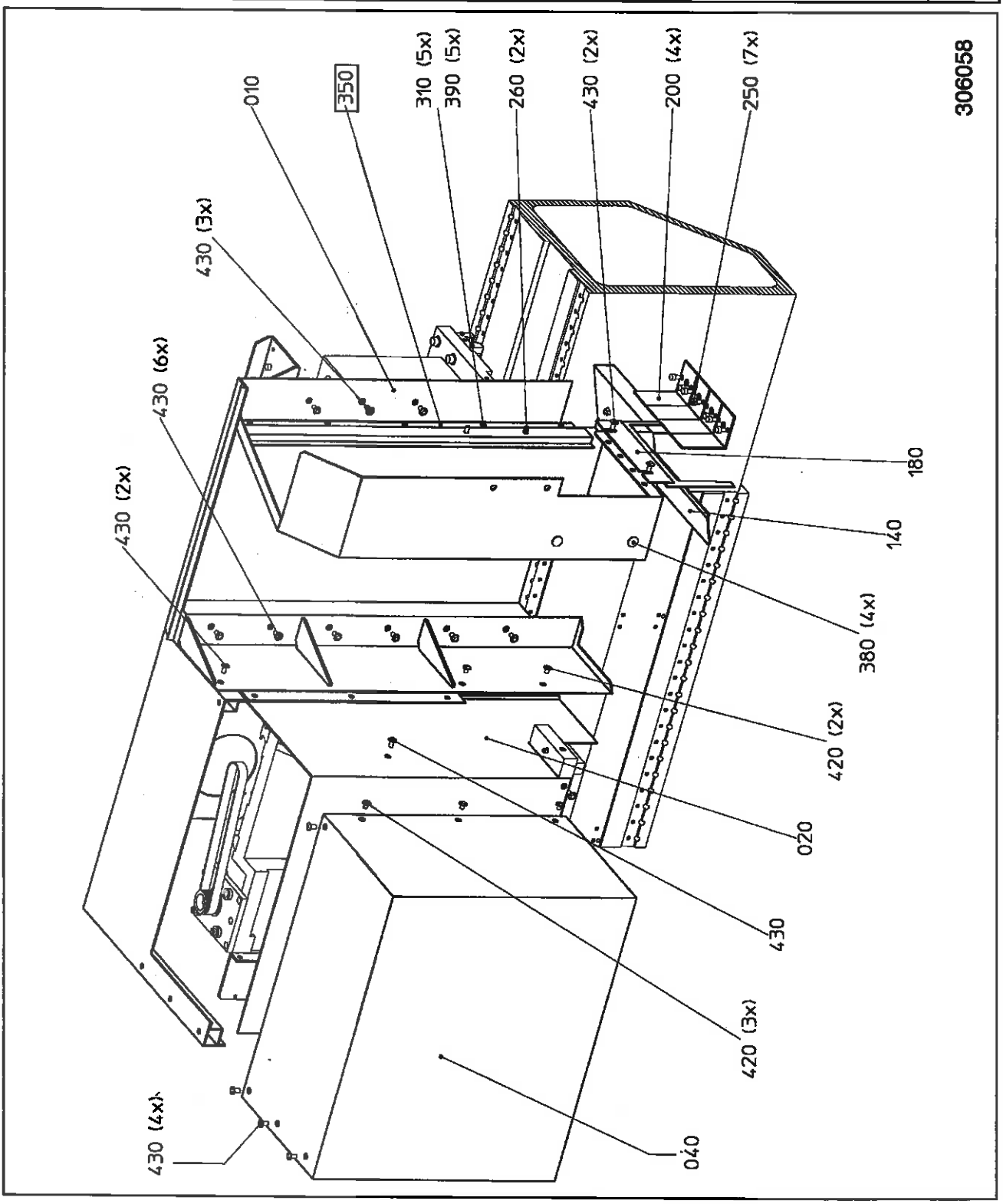

TORNOS BECHLER

1.22 GUIDEBUSH COOLANT (306057)

Item □		Designation	No.
100	*215356	Filter PER 20 micron	1

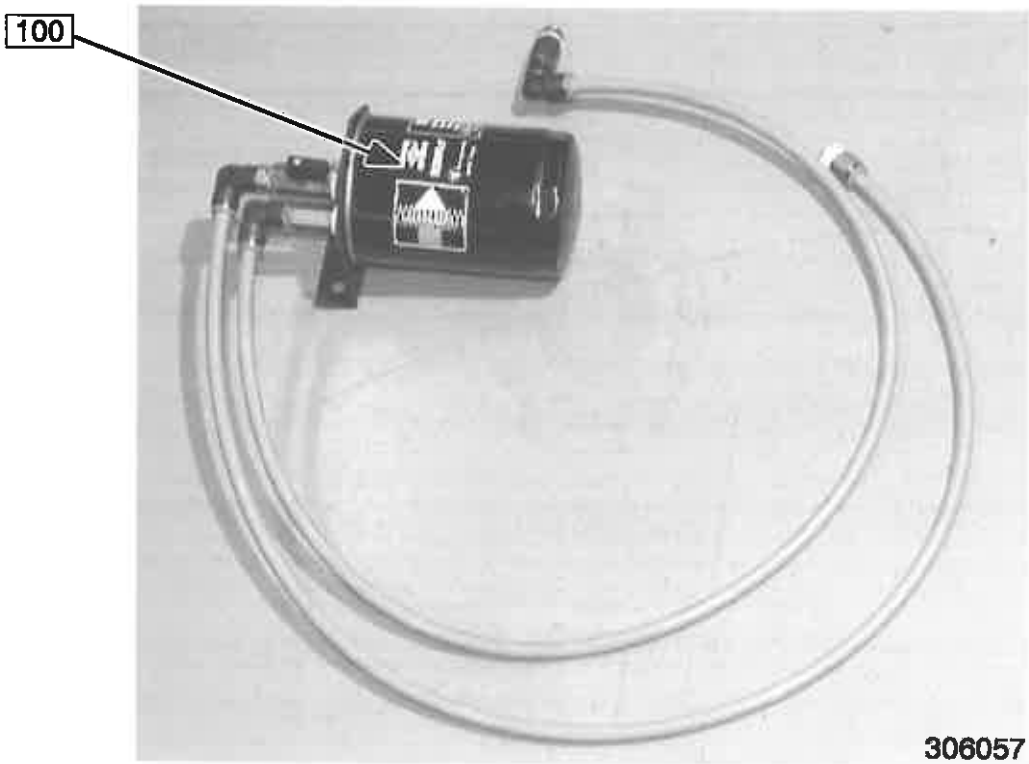

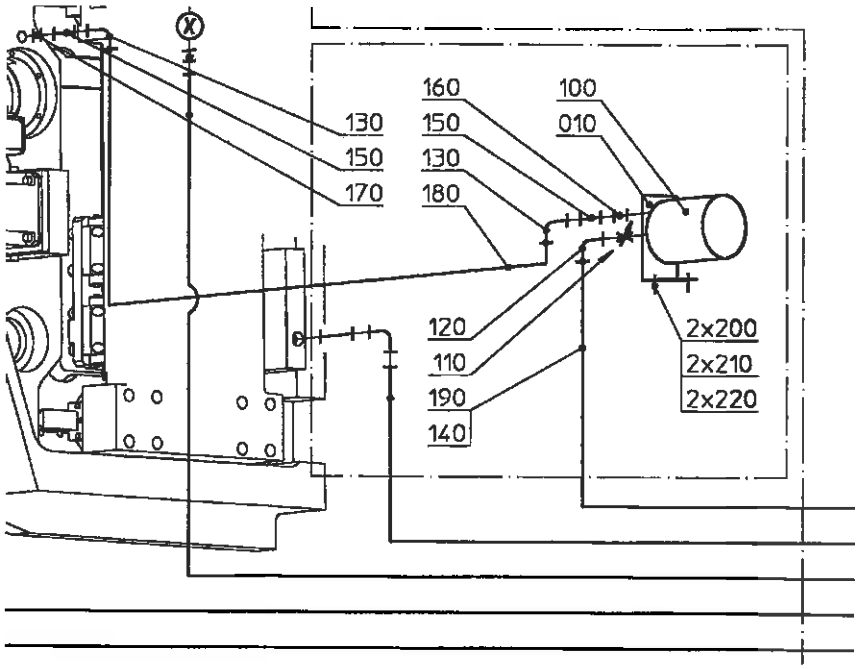

TORNOS BECHLER

1.24 GUIDEBUSH DRIVE (306027)

Item □		Designation	No.
420	**216906	Belt Syncroflex 16 / T10 / 1300	2
420	*216906	Belt Syncroflex 16 / T10 / 1300	2
450	**216931	Belt Syncroflex 16 / T10 / 960	1
450	*216931	Belt Syncroflex 16 / T10 / 960	1

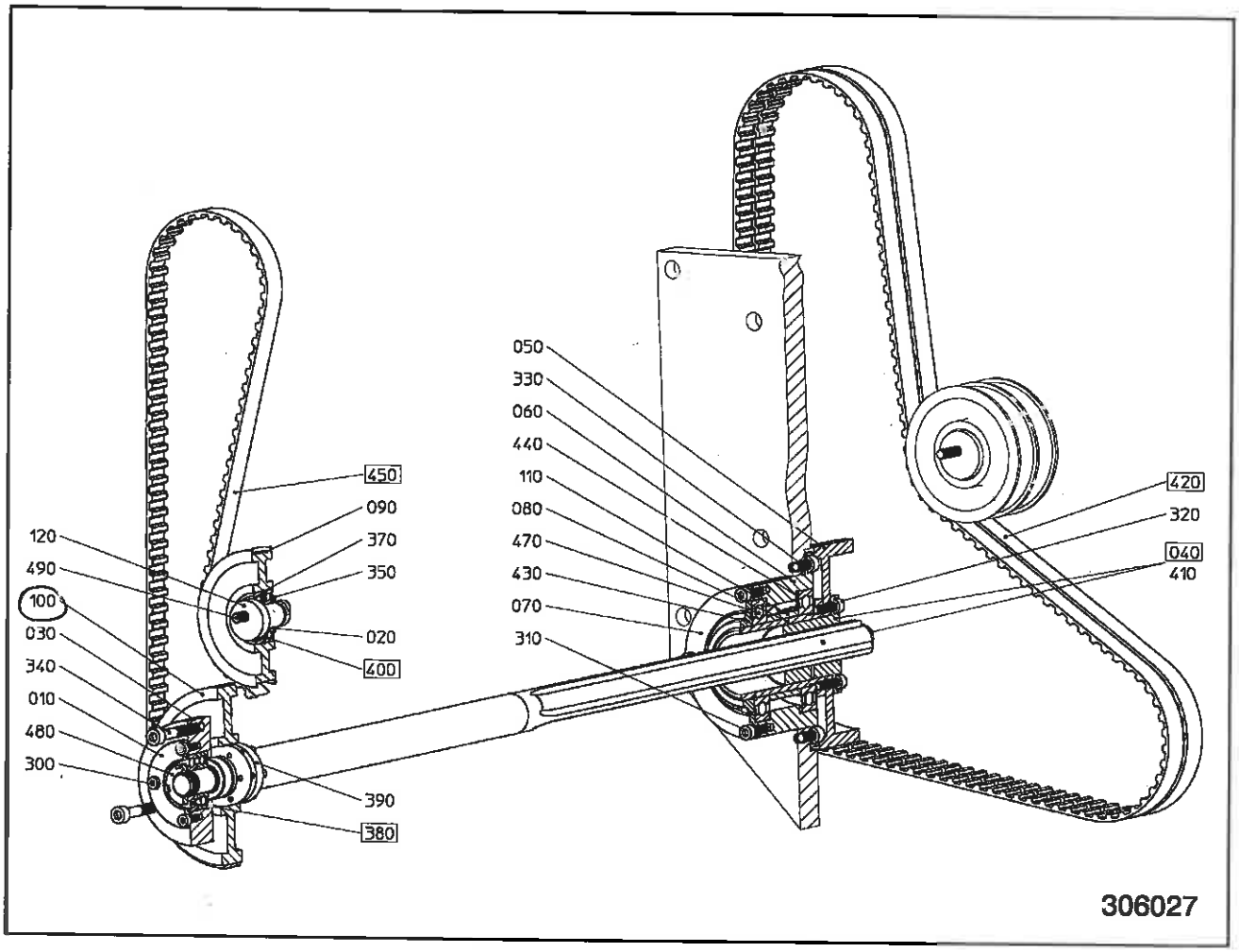

2. INDEX

2.1 SPARE PART TB-IDENT. NO., CHAPTER.PARA. / PAGE

2.1.1 Emergency Spares Recommended

**211028, Belt Syncroflex 16 / T10 / 920, Chap. 1.15 /22
**213900, Belt Syncroflex 25 / T5 / 575, Chap. 1.15 /22
**216906, Belt Syncroflex 16 / T10 / 1300, Chap. 1.24 /34
**216917, Belt Syncroflex 16/T10/1150 (without live guidebush), Chap. 1.5 /5, Chap. 1.6 /7
**216931, Belt Syncroflex 16 / T10 / 960, Chap. 1.24 /34
**216951, Belt Syncroflex 32 / T5 / 1315, Chap. 1.9 /12
**216952, Belt Syncroflex 25 / T5 / 400, Chap. 1.9 /12
**562024, Splash Guard, Chap. 1.14 /21

2.1.2 Spares Recommended For Users of Many Machines

*202023, Grooved ball bearing SKF 6004-2RZ FAG 6004-2RSD, Chap. 1.9 /12,Chap. 1.15 /22
*203751, Ball Bearing SKF: 6001-2Z / Springer AG: 6001-XZZ / FAG: 6001-X2ZR,Chap. 1.5 /5
*211028, Belt Syncroflex 16 / T10 / 920, Chap. 1.15 /22
*212371, Collet spring, Chap. 1.4 /4
*213900, Belt Syncroflex 25 / T5 / 575, Chap. 1.15 /22
*214809, Collet MARTONAIR M/60310, Chap. 1.16 /24
*214810, Hydraulic shock absorber ENIDINE Pro 25 MC-3 B, Chap. 1.16 /24
*215356, Filter PER 20 micron, Chap. 1.22 /32
*216156, Deep-groove ball bearing SKF 6002 2RZ, Chap. 1.2 /2, Chap. 1.15 /22
*216161, Double-acting cylinder (ISO 6432) FESTO DSNU-25-160-PPV-A, Chap. 1.16 /24
*216906, Belt Syncroflex 16 / T10 / 1300, Chap. 1.24 /34
*216917, Belt Syncroflex 16/T10/1150 (without live guidebush), Chap. 1.5 /5, Chap. 1.6 /7
*216924, Wiper Hennig, Chap. 1.7 /8, Chap. 1.8 /10
*216931, Belt Syncroflex 16 / T10 / 960, Chap. 1.24 /34
*216951, Belt Syncroflex 32 / T5 / 1315, Chap. 1.9 /12
*216952, Belt Syncroflex 25 / T5 / 400, Chap. 1.9 /12
*216954, Grooved ball bearing SKF 6001 2RZ, Chap. 1.9 /12
*216994, Wiper Hennig type AB 1 Angle plate, Chap. 1.20 /29
*216999, Double-acting cylinder (ISO 6432) FESTO DSNU-25-600-PPV-A, Chap. 1.16 /24
*217011, Adjustable flow regulator FESTO GRLA-1/8-QS-4, Chap. 1.17 /26
*217012, Wiper Hennig type AB 1 straight, Chap. 1.21 /30
*217066, Ball bush STAR 0733-220-45, Chap. 1.16 /24
*217067, Wiper STAR 1331-720-50, Chap. 1.16 /24
*217192, with 561515 O-Ring 1,78 x 1,78, Chap. 1.3 /3
*217193, with 561514 O-Ring 3,79 x 1,78, Chap. 1.3 /3
*475242, Shock absorber, Chap. 1.1 /1, Chap. 1.7 /8, Chap. 1.8 /10, Chap. 1.10 /14, Chap. 1.12 /17, Chap. 1.13 /18

TORNOS BECHLER

TOOLING CATALOGUE

DECO 20 mm
DECO 26 mm
300405 E

ATTENTION !
Before handling the machine, read first the information contained in the leaflet entitled "SAFETY REGULATIONS"

TORNOS-BECHLER S.A.
CH-2740 MOUTIER / Suisse
Internet: http://www.tornos.ch

© 1999 Printed in Switzerland

This document is based on the information available at the moment of its publication. Although the very best has been done in order to have the contents as precise as possible, the document does not pretend to cover all details of the hardware and software, nor to anticipate every contingency.

TORNOS-BECHLER S.A. give no guarantee nor assume any liability for the exactitude and the sufficiency of the information contained in this booklet.

The contents of this manual remain the property of TORNOS-BECHLER S.A. who reserve the right to modify, complete or correct it at any time.

The risk of misinterpretation of the contents of this manual can be considerably reduced, if the user attends the training courses offered by TORNOS-BECHLER S.A.

TABLE OF CONTENTS

1.	**MAIN-SPINDLE COLLETS**	**1**
1.1	MAIN-SPINDLE COLLET, TYPE F25	1
1.2	MAIN-SPINDLE COLLET, TYPE F20	1
1.3	MAIN-SPINDLE COLLET, TYPE F30	1
1.4	MAIN-SPINDLE COLLET, TYPE F37	2
2.	**GUIDEBUSHES**	**1**
2.1	SYNCHRONOUS REVOLVING GUIDEBUSH, CAPACITY 20 MM	1
2.2	SYNCHRONOUS REVOLVING GUIDEBUSH, CAPACITY 32 MM	1
2.3	SYNCHRONOUS REVOLVING GUIDEBUSH, CAPACITY 26 MM	1
2.4	STATIONARY ADJUSTABLE DRAWN GUIDEBUSH, CAPACITY 20 MM	2
2.5	ROLLER GUIDEBUSHES	2
2.6	ROLLER GUIDEBUSH FOR 26 TO 32MM DIAMETERS	2
3.	**COUNTER-SPINDLE COLLETS**	**1**
3.1	COUNTER-SPINDLE COLLET TYPE F25	1
3.2	COUNTER-SPINDLE COLLET TYPE F30	1
3.3	COUNTER-SPINDLE COLLET TYPE F37	1
3.4	COUNTER-SPINDLE COLLET: SPECIAL MAKES	2
3.5	COUNTER-SPINDLE COLLET: SPECIAL MAKES	2
4.	**PRESETTABLE LEFT / RIGHT TOOLHOLDER FOR POSITIONS T11 TO T15, T21 TO T25 AND T51 TO T53, OPTIONS 1001 AND 1002**	**1**
4.1	CENTERING TOOL HOLDER	1
5.	**LIVE DRILLING / MILLING UNIT FOR FOR POSITIONS T21 TO T24, T31 TO T34 AND T51 TO T53, OPTION 1600**	**1**
5.1	CLAMPING COLLETS	1
5.2	ER 11 COLLET CHUCK SPINDLE	1
5.3	ESX 16 COLLET CHUCK EXTENSION ARBOR, OPTION 1610	1
5.4	MILLING ARBORS FOR CIRCULAR CUTTERS, OPTIONS 1620, 1630, 1640, & 1660	2
5.5	QUICK-CHANGE COLLET CHUCK EXTENSION ARBOR	3
6.	**LIVE DRILLING / MILLING HF-SPINDLE FOR POSITIONS T11 TO T15, T21 TO T25, T31 TO T34, T41 TO T44 AND T51 TO T53, OPTION 2000**	**1**
6.1	CLAMPING COLLET	1

6.2 MILLING ARBOR 1

7. RADIAL POLYGONING ATTACHMENT FOR POSITION T25, OPTION 1700 1

7.1 POLYGONING CUTTER WITH INSERTS FUNCTION 1710 1

8. 20MM-BORE STATIONARY TOOLHOLDER FOR POSITIONS T31 TO T34 AND T41 TO T43, OPTION 3100 (SAME ITEMES AS IN CHAPTER 10) 1

9. 25MM-BORE STATIONARY TOOLHOLDER FOR POSITIONS T31 TO T34 AND T41 TO T43, OPTION 3110 1

9.1 CY25/E20 COLLET CHUCK SPINDLE, OPTION 3132 1

9.2 CY25/E25 COLLET CHUCK SPINDLE, OPTION 3131 1

9.3 CY25/E20 QUICK-CHANGE SPINDLE, SCHÄUBLIN SYSTEM 62, OPTION 3111 2

9.4 E20 / ESX 16 COLLET CHUCK FOR QUICK-CHANGE SPINDLE, SCHÄUBLIN SYSTEM 62, OPTION 3123 3

9.5 E20 / ESX 20 COLLET CHUCK FOR QUICK-CHANGE SPINDLE, SCHÄUBLIN SYSTEM 62, OPTION 3112 3

9.6 CY25 16MM-BORE QUICK-CHANGE SPINDLE, PIBOMULTI BMR SYSTEM, OPTION 3121 4

9.7 ESX20 COLLET CHUCK FOR QUICK-CHANGE SPINDLE, PIBOMULTI BMR SYSTEM, OPTION 3122 4

9.8 ESX16 COLLET CHUCK FOR QUICK-CHANGE SPINDLE, PIBOMULTI BMR SYSTEM, OPTION 3123 5

9.9 CY25/ER25 QUICK-CHANGE SPINDLE, BIMU SYSTEM 6

10. REMOVABLE 20MM-BORE 3-POSITION TOOLHOLDER FOR POSITIONS T31 TO T33 AND T41 TO T44, OPTION 3140 1

10.1 ESX16 COLLET CHUCK SPINDLE, OPTION 3143 1

10.2 B8 / WJ8 COLLET CHUCK SPINDLE 1

10.3 CY20 11MM-BORE QUICK-CHANGE SPINDLE, PIBOMULTI BMR SYSTEM, OPTION 3141 2

10.3.1 ESX12 Collet Chuck For Quick-Change Spindle, PIBOMULTI BMR System, Option 3142 2

10.4 CY20 14MM-BORE QUICK-CHANGE SPINDLE, PIBOMULTI BMR SYSTEM 3

10.4.1 ESX16 Collet Chuck For Quick-Change Spindle PIBOMULTI BMR System 3

10.4.2 ESX12 Collet Chuck For Quick-Change Spindle PIBOMULTI BMR System 4

11. COLLETS FOR SPINDLES AND EXTENSIONS 1

11.1 COLLET B8 / WJ8 1

11.2 COLLET ESX 25 1
11.3 COLLET EX 25 ULTRA-PRECISE 1
11.4 COLLET ESX 20 2
11.5 COLLET EX 20 ULTRA-PRECISE 2
11.6 COLLET ESX 16 2
11.7 COLLET EX 16 ULTRA-PRECISE 3
11.8 COLLET ESX 12 3
11.9 COLLET EX 12 ULTRA-PRECISE 3
11.10 TAPPING COLLETS 4

12. BARFEEDER COLLETS 1

12.1 BARFEEDER SSF 226 COLLETS FOR DECO 20 1
12.1.1 Collet with 10 mm Shaft 1
12.1.2 Collet with 15 mm Shaft 1
12.1.3 Collet with 20 mm Shaft 1
12.1.4 Collet with 25 mm Shaft 1
12.2 BARFEEDER SSF 532 COLLETS FOR DECO 26 2
12.2.1 Collet with 15 mm Shaft 2
12.2.2 Collet with 25 mm Shaft 2
12.2.3 Collet with 30 mm Shaft 2
12.2.4 Collet with 32 mm Shaft 2

13. MISCELLANEOUS 1

13.1 COOLANT SPOUTS 1
13.2 PART-CATCHING TRAY, OPTIONS 4110, 4111 & 4112 1

1. MAIN-SPINDLE COLLETS

1.1 MAIN-SPINDLE COLLET, TYPE F25

Valid for DECO 20 & 26

Type :	F25	
Reference :	**Schäublin Article No. 76-64**	
Dimensions :	Round :	3 to 20 mm diameter
	Hex :	17 mm across flats max.
	Square :	15 mm across flats max.
Tornos-Bechler Line :	2 002 23	

1.2 MAIN-SPINDLE COLLET, TYPE F20

Valid for DECO 20 only

Type :	F20	
Reference :	Schäublin Article No. 76-201	
Dimensions :	Round :	3 to 16 mm diameter
	Hex :	14 mm across flats max.
	Square :	11 mm across flats max.
Tornos-Bechler Line :	2 002 24	

1.3 MAIN-SPINDLE COLLET, TYPE F30

Valid for DECO 20 & 26

Type :	F30	
Reference :	Schäublin Article No. 76-101	
Dimensions :	Round :	4 to 25.4 mm diameter
	Hex :	22 mm across flats max.
	Square :	18 mm across flats max.
Tornos-Bechler Line :	2 002 09	

1.4 MAIN-SPINDLE COLLET, TYPE F37

Valid for DECO 20 only

Type :	F37	
Reference :	Schäublin Article No. 76-740	
Dimensions :	Round :	5.5 to 32 mm diameter
	Hex :	27 mm across flats max.
	Square :	22 mm across flats max.
Tornos-Bechler Line :	2 002 24	

2. GUIDEBUSHES

2.1 SYNCHRONOUS REVOLVING GUIDEBUSH, CAPACITY 20 MM

Valid for DECO 20 only

Type :	Shaft 28	
Reference :	Meister Article No. 1357	
	Dünner Article No. B260	
	Neukomm Article No. 18.001	
Dimensions :	Round :	6 to 20 mm diameter
	Hex :	17 mm across flats
	Square :	14 mm across flats
Tornos-Bechler Line :	2 002 24	

2.2 SYNCHRONOUS REVOLVING GUIDEBUSH, CAPACITY 32 MM

Valid for DECO 26 only

Reference :	Meister Article No. 229T	
	Dünner Article No. J9	
	Neukomm Article No. 28.001	
Dimensions :	Round :	6 to 32 mm diameter
	Hex :	28 mm across flats
	Square :	23 mm across flats

2.3 SYNCHRONOUS REVOLVING GUIDEBUSH, CAPACITY 26 MM

Valid for DECO 20 & 26

Reference :	Meister Article No. 227 T	
	Dünner Article No. B227	
	Neukomm Article No. 227	
Dimensions :	Round :	3 to 26 mm diameter
	Hex :	22 mm across flats
	Square :	18 mm across flats

2.4 STATIONARY ADJUSTABLE DRAWN GUIDEBUSH, CAPACITY 20 MM

Valid for DECO 20 only

Type :	Shaft 28	
Reference :	Meister Article No. 1357	
	Dünner Article No. B260	
	Neukomm Article No. 18.001	
Dimensions :	Round :	3 to 20 mm diameter
	Hex :	17 mm across flats max.
	Square :	14 mm across flats max.
Tornos-Bechler Line :	2 001 24	

2.5 ROLLER GUIDEBUSHES

Guidebush types and application ranges :

- CNC25 for capacity diameters : 5.68 to 7.36 mm
- CNC30 for capacity diameters : 7.37 to 10.45 mm
- CNC35 for capacity diameters : 10.46 to 14.07 mm
- CNC35 for capacity diameters : 14.08 to 15.57 mm
- CNC35 for capacity diameters : 15.58 to 18.10 mm
- CNC40 for capacity diameters : 18.11 to 20.00 mm
- CNC50 for capacity diameters : 20.01 to 26 mm

Reference : HABEGGER

2.6 ROLLER GUIDEBUSH FOR 26 TO 32MM DIAMETERS

Valid for DECO 26 only

Type : 2000/26 Article 2045066...

(Specify the diameter when ordering)

Reference : HABEGGER

Note : Guidebush Spanner C66 Art. 25000870660 is delivered on request.

3. COUNTER-SPINDLE COLLETS

3.1 COUNTER-SPINDLE COLLET TYPE F25

Valid for DECO 20 & 26

Type :	F25	
Reference :	Schäublin Article No. 76-64	
Dimensions :	Round :	3 to 20 mm diameter
	Hex :	17 mm across flats max.
	Square :	15 mm across flats max.
Tornos-Bechler Line :	2 002 23	

3.2 COUNTER-SPINDLE COLLET TYPE F30

Valid for DECO 20 & 26

Type :	F30	
Reference :	Schäublin Article No. 76-101	
Dimensions :	Round :	4 to 25.4 mm diameter
	Hex :	22 mm across flats max.
	Square :	18 mm across flats max.
Tornos-Bechler Line :	2 002 09	

3.3 COUNTER-SPINDLE COLLET TYPE F37

Valid for DECO 26 only

Type :	F37	
Reference :	Schäublin Article No. 76-740	
Dimensions :	Round :	5.5 to 32 mm diameter
	Hex :	27 mm across flats max.
	Square :	22 mm across flats max.
Tornos-Bechler Line :	2 002 26	

3.4 COUNTER-SPINDLE COLLET: SPECIAL MAKES

Valid for DECO 20 only

Type and characteristics

On request we can execute from collet blanks various models of collets, shanks 25 and 30 mm.

Examples :

- Collet with standard nose extended
- Collet with eccentric bore
- Collet with inside steps

3.5 COUNTER-SPINDLE COLLET: SPECIAL MAKES

Valid for DECO 26 only

Type and characteristics

On request we can execute from collet blanks various models of collets, shanks 25, 30 and 37 mm.

Examples :

- Collet with standard nose extended
- Collet with eccentric bore
- Collet with inside steps

4. PRESETTABLE LEFT / RIGHT TOOLHOLDER FOR POSITIONS T11 TO T15, T21 TO T25 AND T51 TO T53, OPTIONS 1001 AND 1002

4.1 CENTERING TOOL HOLDER

Fig. 401

Type and characteristics

Centering tool holder section 16/24 with different bores (3, 4, 5, 6)

Reference

APPLITEC 2440-3

APPLITEC 2440-4

APPLITEC 2440-5

APPLITEC 2440-6

Note : Other dimensions (bores and offsets) on request

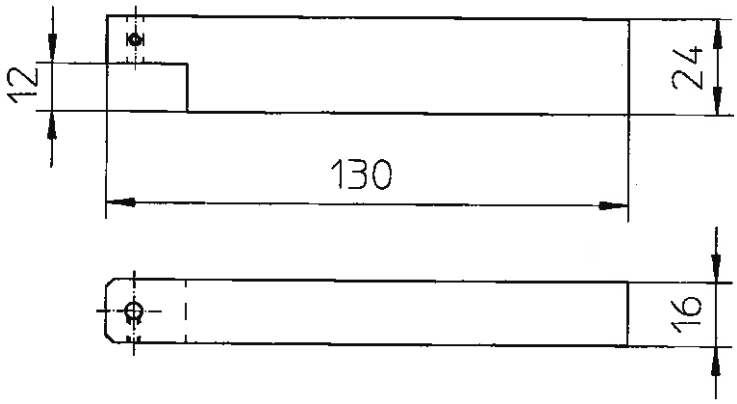

Fig. 401

5. LIVE DRILLING / MILLING UNIT FOR FOR POSITIONS T21 TO T24, T31 TO T34 AND T51 TO T53, OPTION 1600

5.1 CLAMPING COLLETS

Type

Collets ESX 25 and EX 25 (ultra-precise)

5.2 ER 11 COLLET CHUCK SPINDLE

Fig. 501

Reference

Schäublin article Nº. 61-12207

Type and Characteristics

Collet chuck spindle ER 11, shank ∅ 7 mm, length 44 mm, total length 69 mm, delivered with clamping nut Schäublin No. 61-11772. Can accommodate collets ESX 12, EX 12, ER 11 and tapping collet ET 1-12.

Tornos-Bechler Identification

Ident. No 437251

Note : To specify in the order: with spanner ident. 432826.
With tapping collets type ET, use nut
Schäublin type EXP12 art. No. 16-12710.

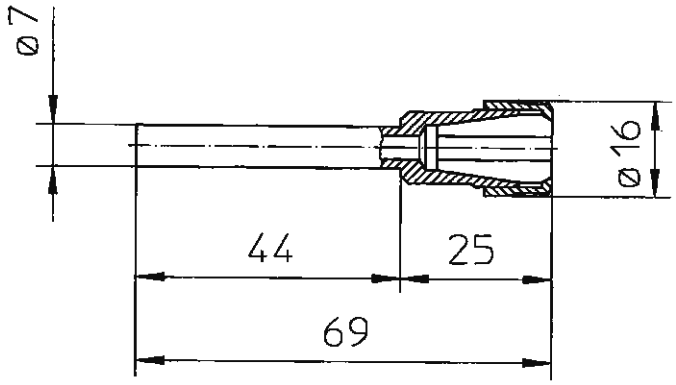

Fig. 501

5.3 ESX 16 COLLET CHUCK EXTENSION ARBOR, OPTION 1610

Fig. 502

Reference

Schäublin article No. 61-16609

Type and characteristics

Extension arbor E25/E16. Is mounted directly into the revolving spindle Option 1600. Delivered with fastening nut Schäublin No 61-25691 and clamping nut Schäublin No 61-16772. Can accommodate collets ESX16, EX16, ER16 and tapping collets ET1-16.

Tornos-Bechler Identification

Ident. No. 595818

Note: To specify in the order: with spanners ident. 595816 and ident. 432827

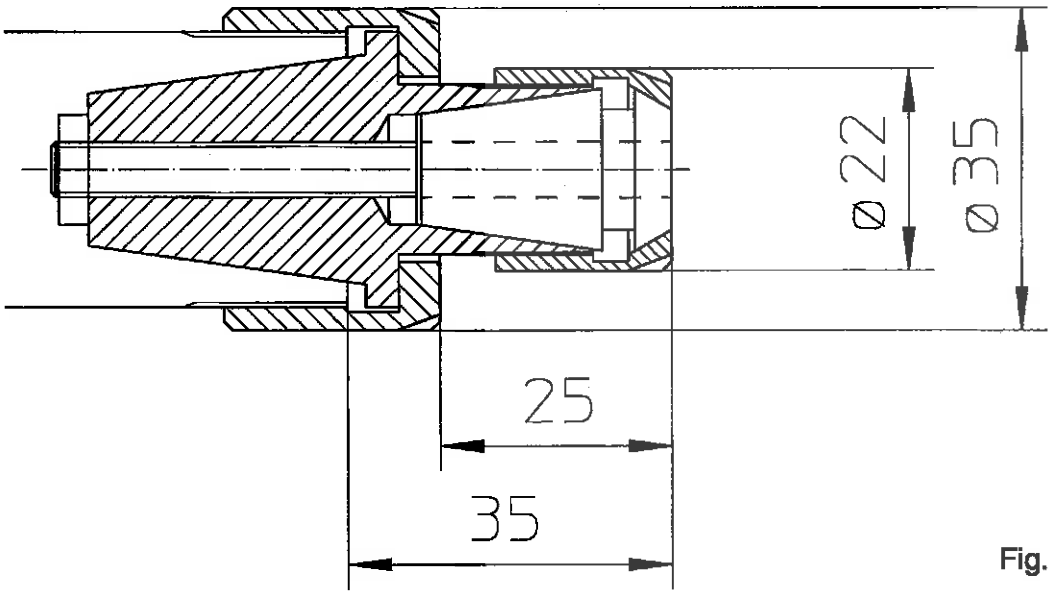

Fig. 502

5.4 MILLING ARBORS FOR CIRCULAR CUTTERS, OPTIONS 1620, 1630, 1640, & 1660

Fig. 503

Type and characteristics

Milling arbors shank E25 for circular saw blades bore Ø 8, 10, 13 and 16 mm. Delivered with locking screw.

Tornos-Bechler Identification

Ident. No. 572664 for circular saw blade bore Ø 13 (Option 1620)

Ident. No. 472065 for circular saw blade bore Ø 10 (Option 1630)

Ident. No. 472066 for circular saw blade bore Ø 8 (Option 1640)

Ident. No. 472067 for circular saw blade bore Ø 16 (Option 1660)

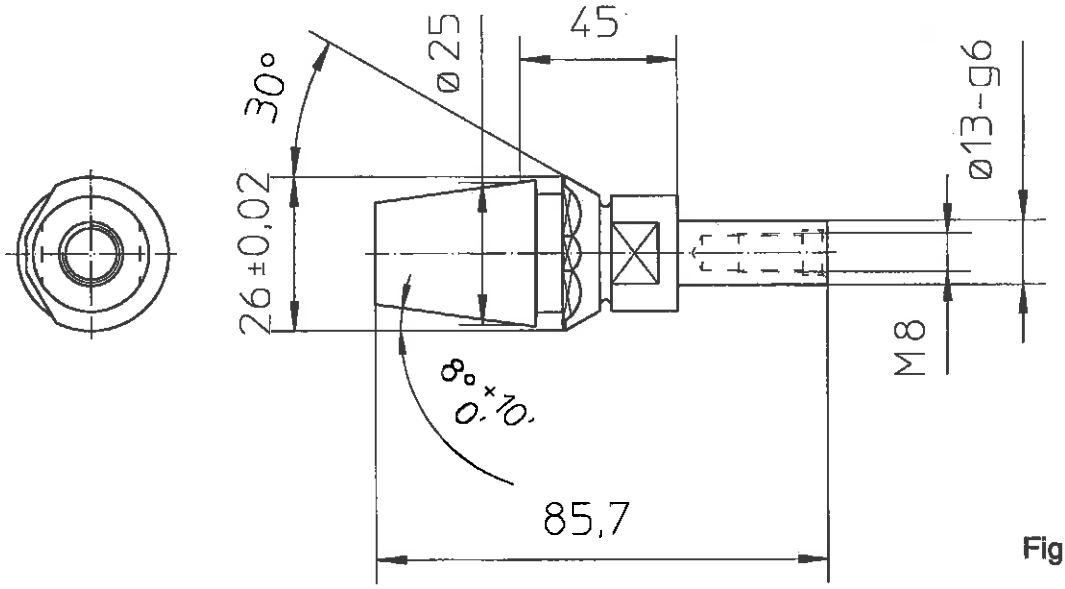

Fig. 503

5.5 QUICK-CHANGE COLLET CHUCK EXTENSION ARBOR

Fig. 504

References

BIMU ER25 / ER20 length 30

BIMU ER25 / ER16 length 30

Types and characteristics

Extension arbor ER25 / ER20 and ER25 / ER16 for quick change. Are mounted directly into the revolving spindle Option 1600. Delivered with fastening nut ER25M No. id. 595980. Can accommodate collets ESX20 (arbor ER25 / ER20) and ESX16 (arbor ER25/ER16)

Tornos-Bechler identifications

Ident. No. 595978 (arbor ER25 / ER20)

Ident. No. 595979 (arbor ER25 / ER16)

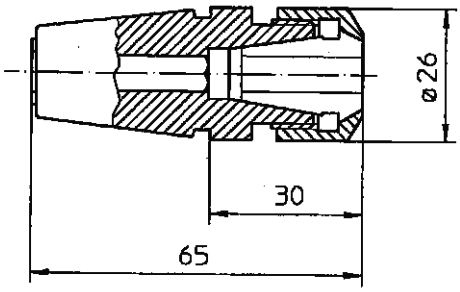

Collet chuck ER25 / ER16 for collet type ESX 16

Fig. 504

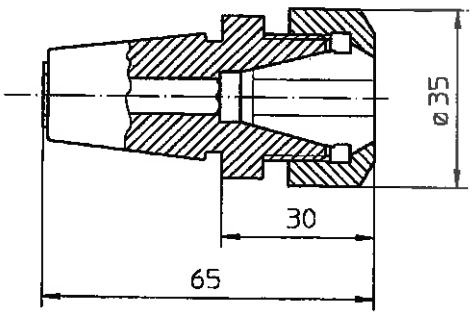

Collet chuck ER25 / ER20 for collet type ESX 20

6. LIVE DRILLING / MILLING HF-SPINDLE FOR POSITIONS T11 TO T15, T21 TO T25, T31 TO T34, T41 TO T44 AND T51 TO T53, OPTION 2000

6.1 CLAMPING COLLET

Type

NSK CH5

Scope

Bores 0,8 to 6 mm every 0,1 mm

6.2 MILLING ARBOR

Type and characteristics

Milling arbor shank ∅ **5** or ∅ **8** mm delivered with **2** rings thickness **3** mm and locking nut

Type

NSK KCH-01E ∅ **5**

NSK KCH-01E ∅ 8

7. RADIAL POLYGONING ATTACHMENT FOR POSITION T25, OPTION 1700

7.1 POLYGONING CUTTER WITH INSERTS FUNCTION 1710

Fig. 701

Type and characteristics

Cutter shank outside diameter 80 mm, bore 16 mm for insert BIMU type 061R (back turning) and 065 (front turning). This cutter shank is delivered with 2 balancing inserts 041R/LK10. Possibility of mounting up to 4 inserts enabling the milling of 1 to 8 flats on the workpiece.

Type

BIMU 320R

Identification Tornos-Bechler

Ident. No. 595973

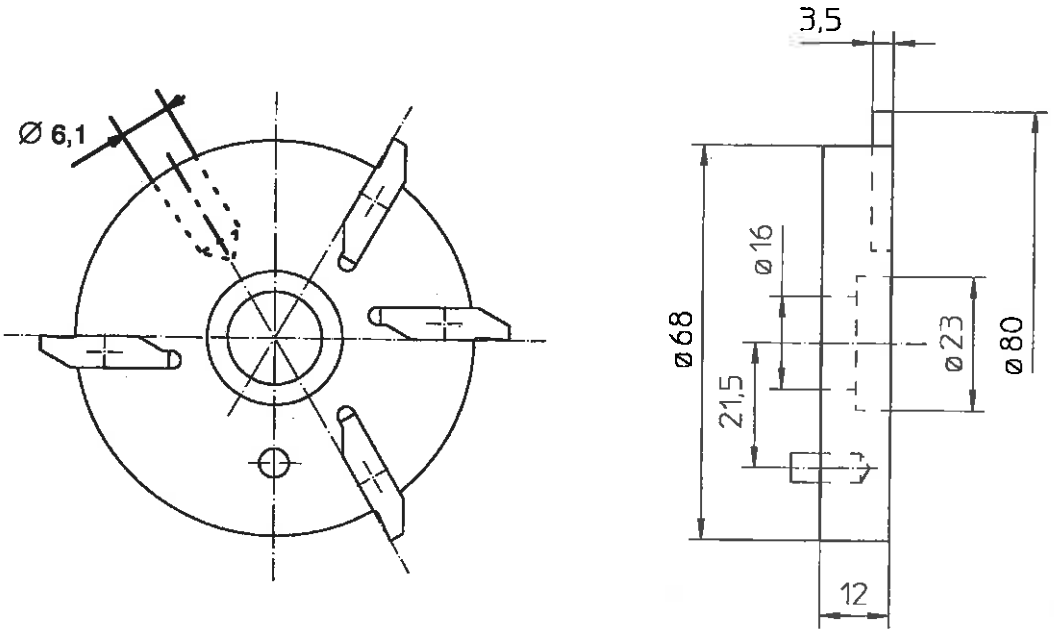

701

8. 20MM-BORE STATIONARY TOOLHOLDER FOR POSITIONS T31 TO T34 AND T41 TO T43, OPTION 3100 (SAME ITEMES AS IN CHAPTER 10)

The same items as in Chapter 10.

9. 25MM-BORE STATIONARY TOOLHOLDER FOR POSITIONS T31 TO T34 AND T41 TO T43, OPTION 3110

9.1 CY25/E20 COLLET CHUCK SPINDLE, OPTION 3132

Fig. 901

Reference

Schäublin article No. 61-20211

Type and characteristics

Collet chuck spindle E20, shank diameter 25 mm, total length 182 mm. Delivered with clamping nut Schäublin No. 61-20772. Can accommodate collets ESX20, EX20, ER20 and tapping collets ET1-20.

Tornos-Bechler Identification

Ident. No. 595777

Note: Specify in your order: with spanner ident. No. 161887. With tapping collet type ET, use a nut Schäublin type EXP20 article No. 20-20710

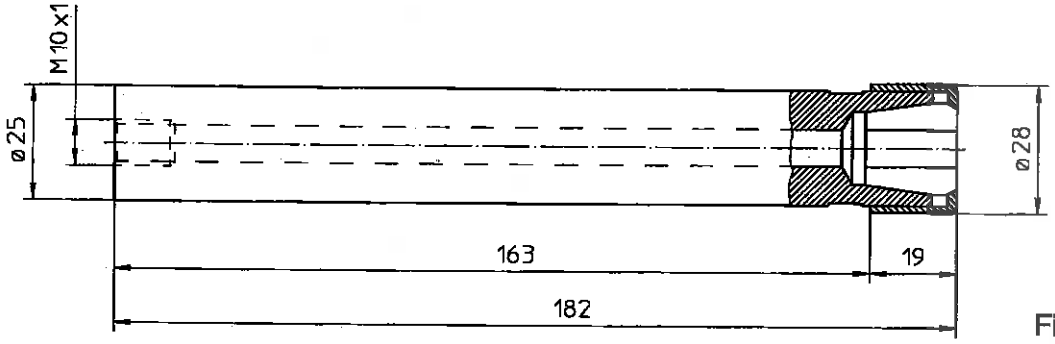

Fig. 901

9.2 CY25/E25 COLLET CHUCK SPINDLE, OPTION 3131

Fig. 902

Type and characteristics

Collet chuck spindle E25, shank diameter 25 mm, total length 181 mm. Delivered with clamping nut Schäublin No. 61-25772. Can accommodate collets ESX25, EX25, ER25.

Reference

Schäublin article No. 61-25216

Tornos-Bechler Identification

Ident. No. 595817

Note : Specify in your order: with spanner ident. No. 595816

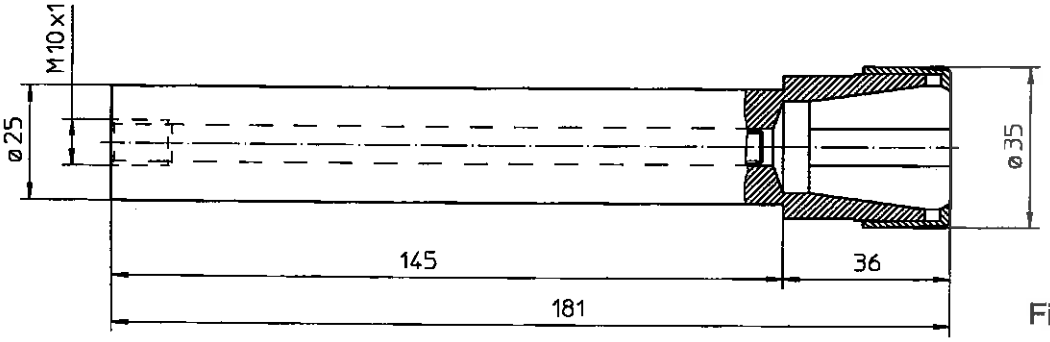

Fig. 902

9.3 CY25/E20 QUICK-CHANGE SPINDLE, SCHÄUBLIN SYSTEM 62, OPTION 3111

Fig. 903

Type and characteristics

Spindle diameter 25 mm for presettable quick-change tool system. Length without extension = 175 mm. Delivered with nut Schäublin article No. 62-20200.

Reference

Schäublin article No. 62-20009

Tornos-Bechler Identification

Ident. No. **595794**

Note : Specify in your order : with spanner ident. No. **595797**

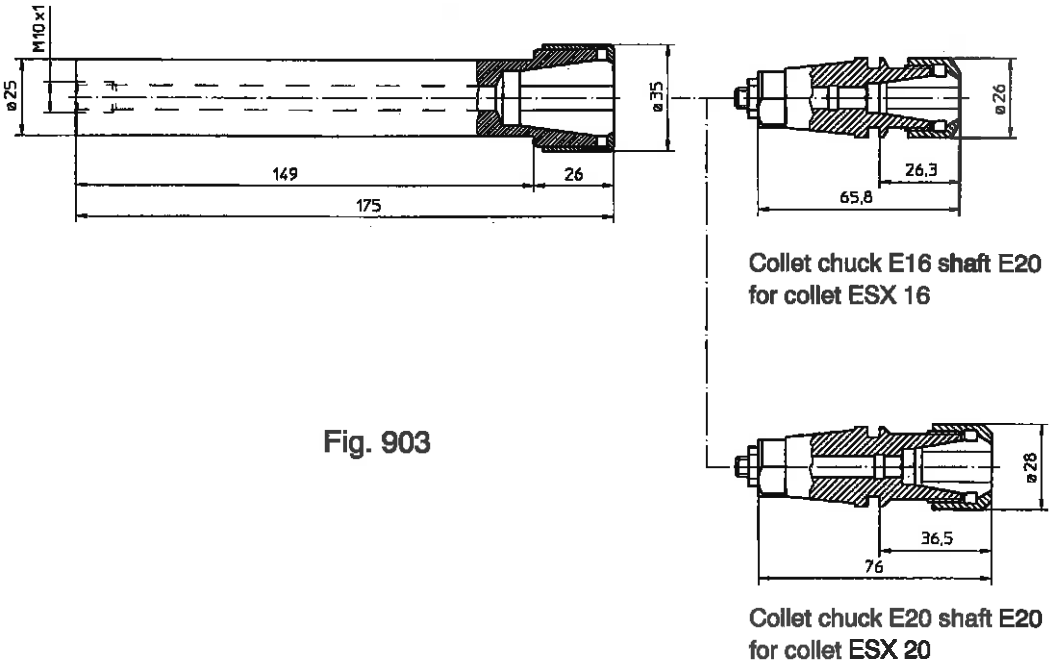

Fig. 903

9.4 E20 / ESX 16 COLLET CHUCK FOR QUICK-CHANGE SPINDLE, SCHÄUBLIN SYSTEM 62, OPTION 3123

Fig. 903

Type and characteristics

Collet chuck E16 shaft E20. Is mounted on tool holder ident. 595794 (fig. 803). Delivered with clamping nut Schäublin No. 61-16710. Can accommodate collets ESX16, EX16 and ER16.

Reference

Schäublin article No. 62-20301

Tornos-Bechler identification

Ident. No. 595795

9.5 E20 / ESX 20 COLLET CHUCK FOR QUICK-CHANGE SPINDLE, SCHÄUBLIN SYSTEM 62, OPTION 3112

Fig. 903

Type and characteristics

Collet chuck E20 shaft E20. Is mounted on tool holder ident. 595794 (fig. 803). Delivered with clamping nut Schäublin No. 61-20772. Can accommodate collets ESX20, EX20 and ER20.

Reference

Schäublin article No. 62-20335

Tornos-Bechler identification

Ident. No. 595796

Note : Specify in your order : with spanner ident. No. 161887

9.6 CY25 16MM-BORE QUICK-CHANGE SPINDLE, PIBOMULTI BMR SYSTEM, OPTION 3121

Fig. 904

Type and characteristics

Spindle diameter 25 mm for presettable quick-change tool system. Length without extension = 172 mm. Can accommodate heads BMR 30/ ESX20 and BMR 20/ESX16. Delivered with reduction sleeve 14/16 ident. No. 572886.

Tornos-Bechler Identification

Ident. No. 572883

9.7 ESX20 COLLET CHUCK FOR QUICK-CHANGE SPINDLE, PIBOMULTI BMR SYSTEM, OPTION 3122

Fig. 904

Type and characteristics

Collet chuck ESX20, shaft diameter 16 mm. Delivered with reduction sleeve. Can accommodate collets ESX20, EX20 and ER20.

Reference

PIBOMULTI BMR 30-10.

Tornos-Bechler Identification

Ident. No. 572440

9.8 ESX16 COLLET CHUCK FOR QUICK-CHANGE SPINDLE, PIBOMULTI BMR SYSTEM, OPTION 3123

Fig. 904

Type and characteristics

Collet chuck ESX16, shank diameter 14 mm. Delivered with clamping nut. Can accommodate collets ESX16, EX16 and ER16.

Reference

PIBOMULTI BMR 20-10

Tornos-Bechler Identification

Ident. No. 572439

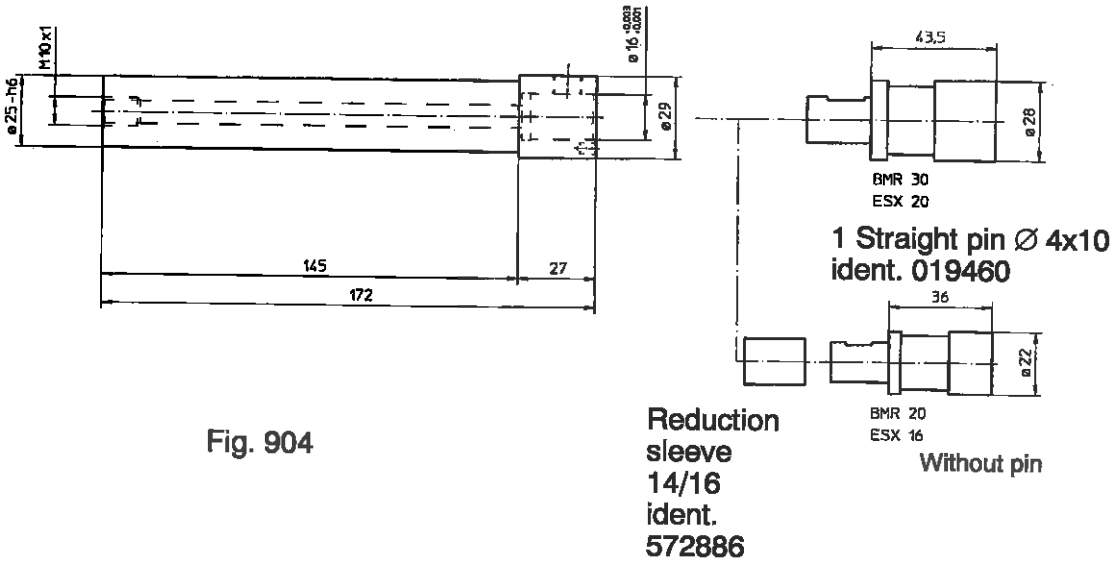

Fig. 904

9.9 CY25/ER25 QUICK-CHANGE SPINDLE, BIMU SYSTEM

Fig. 905

Type and characteristics

Spindle diameter 25 mm for presettable quick change tool system. Length without extension = 167 mm. Delivered with nut type ER25M No. id. 595980 and closing spring.

Reference

BIMU RF525825

Tornos-Bechler Identification

Ident. No. **595977**

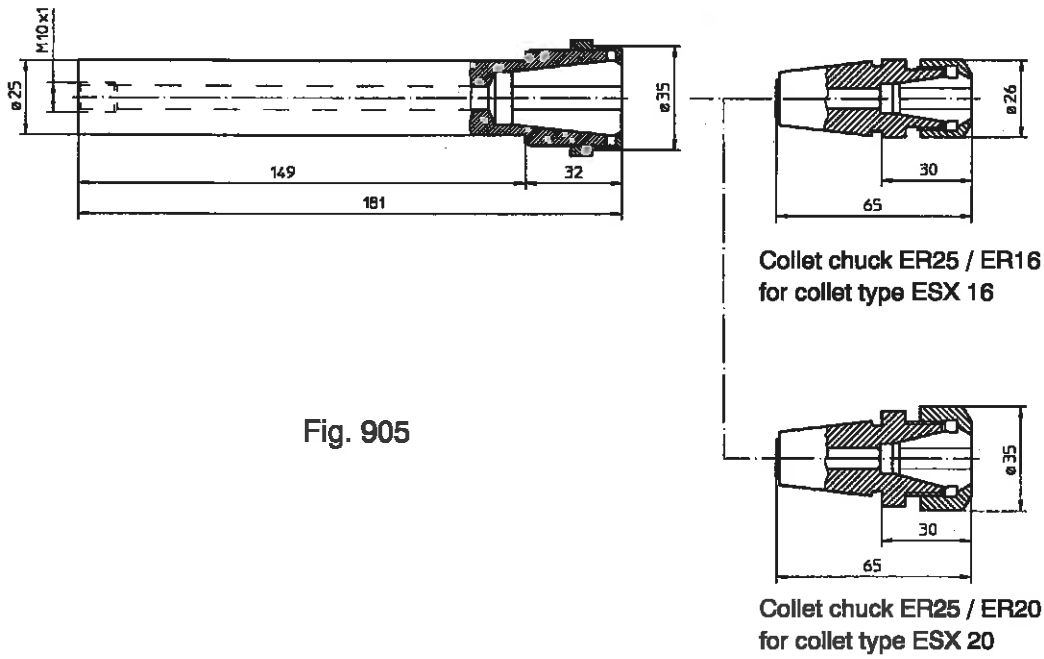

Fig. 905

Note : For collet chucks: See chap. 5.5 according fig. 504.

10. REMOVABLE 20MM-BORE 3-POSITION TOOLHOLDER FOR POSITIONS T31 TO T33 AND T41 TO T44, OPTION 3140

10.1 ESX16 COLLET CHUCK SPINDLE, OPTION 3143

Fig. 1001

Type and characteristics

Collet chuck spindle ESX16, shank diameter 20 mm, length 162 mm, total length 180 mm. Delivered with clamping nut Schäublin No. 61-16772 diameter ∅ 22 mm.

Tornos-Bechler Identification

Ident. No. 595770 but with flat for clamping

Note : Specify in your order : with spanner ident. No. 432827

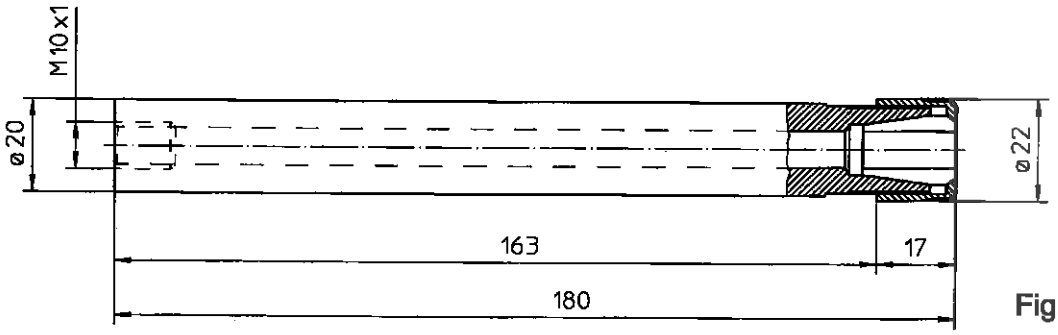

Fig. 1001

10.2 B8 / WJ8 COLLET CHUCK SPINDLE

Fig. 1002

Type and characteristics

Collet chuck spindle B8 / WJ8, shaft diameter 20 mm, total length 170 mm with inner tie.

Tornos-Bechler Identification

Ident. No. 572227 but with flat for clamping

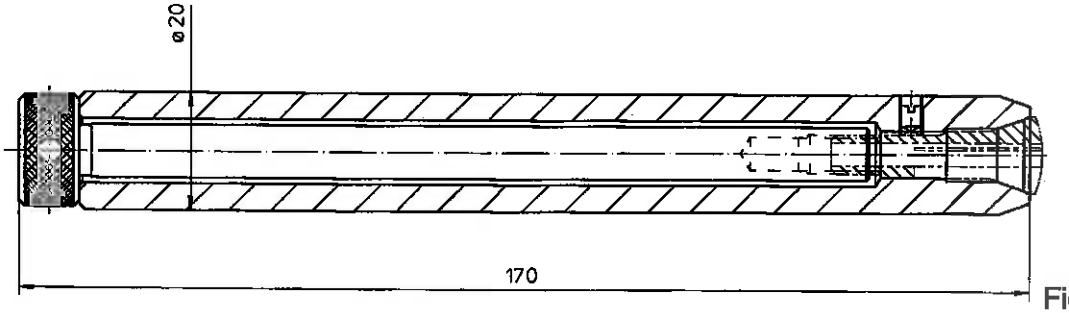

Fig. 1002

10.3 CY20 11MM-BORE QUICK-CHANGE SPINDLE, PIBOMULTI BMR SYSTEM, OPTION 3141

Fig. 1003

Type and characteristics

Spindle diameter 20 mm for presettable quick change tool system. Total length without extension = 172 mm. Can accommodate head BMR 10 / ESX 12.

Tornos-Bechler identification

Ident. No. 572881

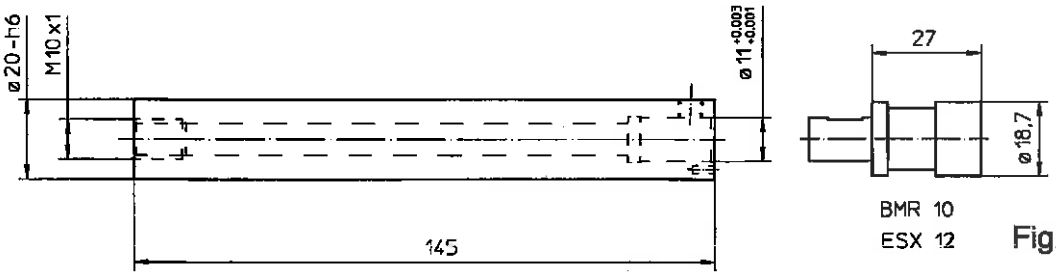

Fig. 1003

10.3.1 ESX12 Collet Chuck For Quick-Change Spindle, PIBOMULTI BMR System, Option 3142

Fig. 1003

Type and characteristics

Collet chuck ESX12, shank diameter 11 mm. Delivered with clamping nut. Can accommodate collets ESX12, EX12 and ER12.

Reference

PIBOMULTI BMR 10-10

Tornos-Bechler identification

Ident. No. 572438

10.4 CY20 14MM-BORE QUICK-CHANGE SPINDLE, PIBOMULTI BMR SYSTEM

Fig. 1004

Type and characteristics

Spindle diameter 20 mm for presettable quick change tool system. Total length without extension = 172 mm. Can accommodate head BMR 20 / ESX 16 or BMR 10 / ESX 12. Delivered with reduction sleeve diameter 11/14 ident. 572374.

Tornos-Bechler Identification

Ident. No. 572880

10.4.1 ESX16 Collet Chuck For Quick-Change Spindle PIBOMULTI BMR System

Fig. 1004

Type and characteristics

Collet chuck ESX16, shank diameter 16 mm. Delivered with clamping nut. Can accommodate collets ESX16, EX16 and ER16.

Reference

PIBOMULTI BMR 20-10

Tornos-Bechler Identification

Ident. No. 572439

10.4.2ESX12 Collet Chuck For Quick-Change Spindle PIBOMULTI BMR System

Fig. 1004

Type and characteristics

Collet chuck ESX12, shank diameter 11 mm. Delivered with clamping nut. Can accommodate collets ESX12, EX12 and ER12.

Reference

PIBOMULTI BMR 10-10

Tornos-Bechler Identification

Ident. No. 572438

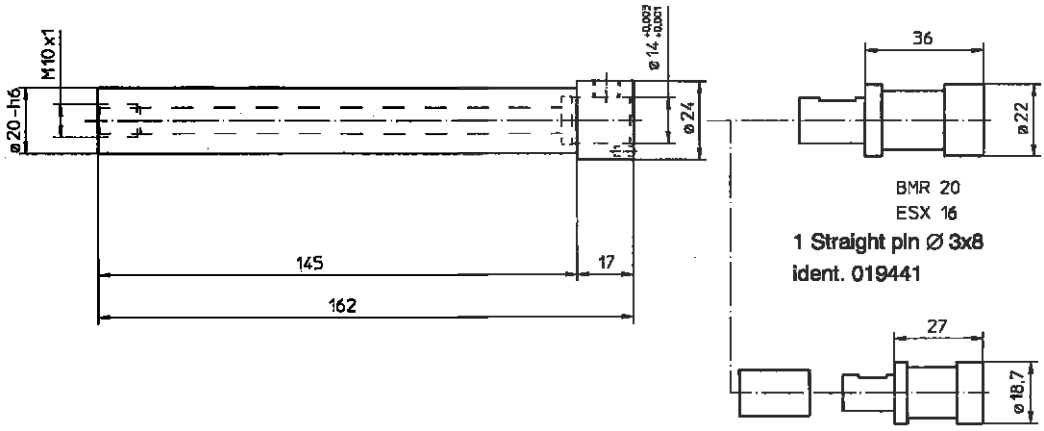

Fig. 1004

Reduction sleeve
11/14
ident. 572374

BMR
10
Without pin
ESX
12

11. COLLETS FOR SPINDLES AND EXTENSIONS

11.1 COLLET B8 / WJ8

Type

B8

Reference

Schäublin article No. 72-137-800

Scope

Diameter 0,4 to 8 mm every 0,1 mm

Tornos-Bechler Line

2 002 32

11.2 COLLET ESX 25

Type

ESX 25

Reference

Schäublin article No. 75-25300

Scope

Diameter 1 to 16 mm every 0,5 mm up to diameter 3 mm and every 1 mm afterwards.

Tornos-Bechler Line

2 140 05

11.3 COLLET EX 25 ULTRA-PRECISE

Type

EX 25

Reference

Schäublin article No. 75-25200

Scope

Diameter 1 to 16 mm every 1 mm

Tornos-Bechler Line

2 140 12

11.4 COLLET ESX 20

Type

ESX 20

Reference

Schäublin article No. 75-20300

Scope

Diameter 1 to 13 mm every 0,5 mm up to diameter 3 mm and every 1 mm afterwards

Tornos-Bechler Line

2 140 04

11.5 COLLET EX 20 ULTRA-PRECISE

Type

EX 20

Reference

Schäublin article No. 75-20200

Scope

Diameter 1 to 13 mm every 1 mm

Tornos-Bechler Line

2 140 11

11.6 COLLET ESX 16

Type

ESX 16

Reference

Schäublin article No. 75-16300

Scope

Diameter 1 to 10 mm every 0,5 mm up to diameter 3 mm and every 1 mm afterwards.

Tornos-Bechler Line

2 140 03

11.7 COLLET EX 16 ULTRA-PRECISE

Type

EX 16

Reference

Schäublin article No. 75-16200

Scope

Diameter 1 to 10 mm every 0,5 mm up to diameter 3 mm and every 1 mm afterwards.

Tornos-Bechler Line

2 140 10

11.8 COLLET ESX 12

Type

ESX 12

Reference

Schäublin article No. 75-12300

Scope

Diameter 0,5 to 7 mm every 0,5 mm

Tornos-Bechler Line

2 140 02

11.9 COLLET EX 12 ULTRA-PRECISE

Type

EX 12

Reference

Schäublin article No. 75-12200

Scope

Diameter 0,5 to 7 mm every 0,5 mm

Tornos-Bechler Line

2 140 09

11.10 TAPPING COLLETS

Type

ET

References

PCM ET 1-12...

PCM ET 1-16...

PCM ET 1-20...

PCM ET 1-25...

Scope

PCM ET 1-12 : M1 to M4, Diameter 1 to 3,55 mm, extension stroke 5,5 mm

PCM ET 1-16 : M1 to M6, Diameter 1 to 6,3 mm, extension stroke 7 mm

PCM ET 1-20 : M1 to M8, Diameter 2,2 to 7,1 mm, extension stroke 7 mm

PCM ET 1-25 : M1 to M10, Diameter 2,5 to 10 mm, extension stroke 8 mm

Tornos-Bechler Line

2 133 01 for ET 1-12

2 133 02 for ET 1-16

2 133 03 for ET 1-20

2 133 04 for ET 1-25

12. BARFEEDER COLLETS

12.1 BARFEEDER SSF 226 COLLETS FOR DECO 20

12.1.1 Collet with 10 mm Shaft

Type and Characteristics

Robobar

Diameters : 3 to 8 mm every 0.1 mm

Tornos-Bechler Line : 2 090 97

12.1.2 Collet with 15 mm Shaft

Type and Characteristics

Robobar

Diameters : 3 to 13 mm every 0.1 mm

Tornos-Bechler Line : 2 090 98

12.1.3 Collet with 20 mm Shaft

Type and Characteristics

Robobar

Diameters : 8 to 18 mm every 0.1 mm

Tornos-Bechler Line : 2 090 79

12.1.4 Collet with 25 mm Shaft

Type and Characteristics

Robobar

Diameters : 13 to 22 mm every 0.1 mm

Tornos-Bechler Line : 2 090 99

12.2 BARFEEDER SSF 532 COLLETS FOR DECO 26

12.2.1 Collet with 15 mm Shaft

Type and Characteristics

SHK D15 up to dia. 13 mm

Reference : FMB

12.2.2 Collet with 25 mm Shaft

Type and Characteristics

SHT D25 up to dia. 23 mm

Reference : FMB

12.2.3 Collet with 30 mm Shaft

Type and Characteristics

SHT D30 up to dia. 27 mm

Reference FMB

12.2.4 Collet with 32 mm Shaft

Type and Characteristics

SHT D32 up to dia. 28 mm

Reference : FMB

13. MISCELLANEOUS

13.1 COOLANT SPOUTS

Fig. 1301

Type and characteristics

Coolant spouts diameter 6 mm with thread M6 length 46 and 106

Tornos-Bechler Identification

Ident. No. 572896 (length 46 mm)

Ident. No. 572897 (length 106 mm)

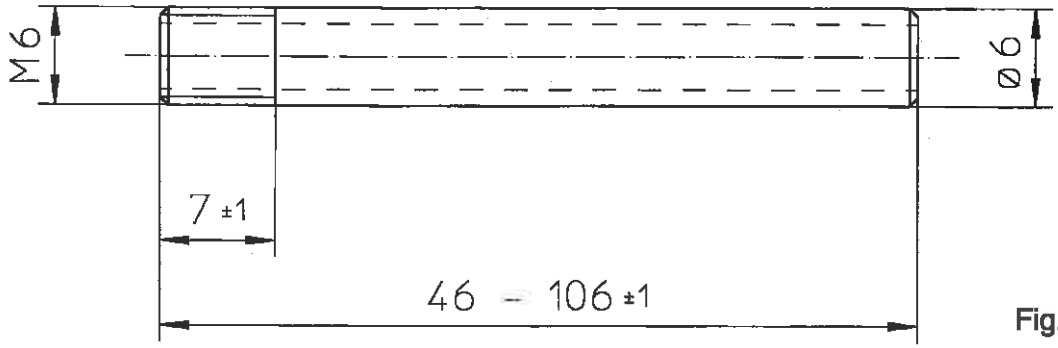

Fig. 1301

13.2 PART-CATCHING TRAY, OPTIONS 4110, 4111 & 4112

Fig. 1302

Type and characteristics

Part receptacle in perforated sheet steel

Tornos-Bechler Identification

Ident. No. 572803 and 572804 (length 100 mm, Option 4110)

Ident. No. 572805 and 572806 (length 135 mm, Option 4111)

Ident. No. 572807 and 572808 (length 180 mm, Option 4112)

Ident. No. 472071 and 472072 (length 135 for part recuperation from guidebush)

Ident. No. 472073 and 472074 (length 180 for part recuperation from guidebush)

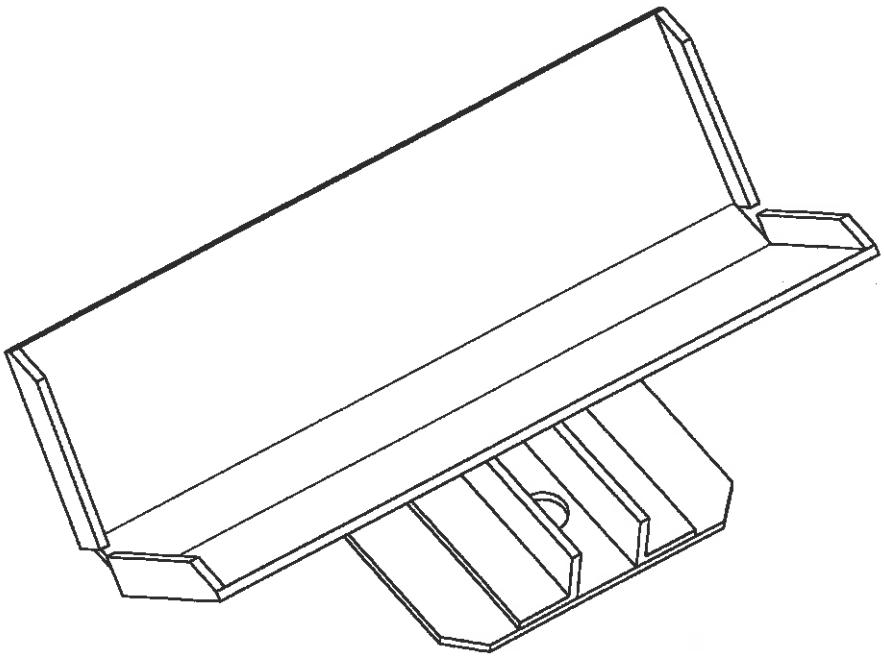

1302

TORNOS BECHLER

OPTIONS

DECO 20 mm
DECO 26 mm
300406 E

ATTENTION !
Before handling the machine, read first the information contained in the leaflet entitled "SAFETY REGULATIONS"

TORNOS-BECHLER S.A.
CH-2740 MOUTIER / Suisse
Internet: http://www.tornos.ch

© 1999/2000 Printed in Switzerland

This document is based on the information available at the moment of its publication. Although the very best has been done in order to have the contents as precise as possible, the document does not pretend to cover all details of the hardware and software, nor to anticipate every contingency.

TORNOS-BECHLER S.A. give no guarantee nor assume any liability for the exactitude and the sufficiency of the information contained in this booklet.

The contents of this manual remain the property of TORNOS-BECHLER S.A. who reserve the right to modify, complete or correct it at any time.

The risk of misinterpretation of the contents of this manual can be considerably reduced, if the user attends the training courses offered by TORNOS-BECHLER S.A.

TORNOS BECHLER

TABLE OF CONTENTS

1. GUIDEBUSH OPTIONS 1

1.1 HABEGGER ROLLER-GUIDEBUSH 1
1.1.1 (595798) HABEGGER Guidebush 1
1.2 (306057) GUIDEBUSH COOLANT SYSTEM 4
1.3 LIVE GUIDEBUSHES 6
1.3.1 (306078) Live 25.4mm Guidebush 6
1.3.2 (306112) Live 32mm Guidebush 9
1.4 GUIDEBUSH DRIVES 13
1.4.1 (306027) Guidebush Drive For DECO 20 13
1.4.2 (306113) Guidebush Drive For DECO 26 13

2. SPINDLE OPTIONS 1

2.1 (306064) Lightweight Spring For DECO 20 1
2.2 COLLET SLEEVES 3
2.2.1 (306042) F20-Collet Sleeve For DECO 20 3
2.2.2 (306077) F30-Collet Sleeve For DECO 20 5
2.2.3 (306119) F25-Collet Sleeve For DECO 26 Main Spindle 6
2.2.4 (306104) F30-Collet Sleeve For DECO 26 Main Spindle 7
2.2.5 (306095) F37-Collet Sleeve For DECO 26 Main Spindle 8
2.3 CHUCKING FORCE 9
2.3.1 (306031) Variable Chucking Force System 9
2.4 MECHANICAL LOCKING FOR SPINDLE 11
2.4.1 (306122) Positioned-Spindle Locking System 11
2.4.2 (306125) Positioned-Spindle Locking Pneumatics 17

3. X1-X2 & X2-Y2 GANG OPTIONS 1

3.1 16X16MM-TOOLHOLDERS 1
3.1.1 (306033) Left / Right Toolholder 1
3.1.2 (306061) High Toolholder 1
3.2 2-POSITION FIXED TOOLHOLDERS 2
3.2.1 (306067) 2x16mm-ID Knee-Toolholder 2
3.2.2 (306068) 25mm-ID Knee-Toolholder 5
3.3 LIVE UNITS FOR ESX 25-COLLET 8
3.3.1 (306038) Drilling Spindle For ESX 25-Collet 8
3.3.2 (306086) 63mm-OD Milling Spindle For ESX 25-Collet 11
3.4 RADIAL POLYGONING 14
3.4.1 (306071) Polygoning Unit 14

3.5 GENERATING 18
3.5.1 (306083) Generating Milling Unit 18
3.6 THREAD WHIRLING 22
3.6.1 (306101) Thread Whirling 22
3.7 VERY HIGH-FREQUENCY DRILLING AND MILLING (40000 RPM) 27
3.7.1 (306066) 30mm-ID Toolholder 27
3.7.2 (306070) HF Drilling Spindle 29
3.7.3 (306087) HF Generator Enclosure 32
3.8 HIGH-FREQUENCY MILLING AND SLOTTING (15000 RPM) 33
3.8.1 (306066) 30mm-ID Toolholder, see Para. 3.7.1 33
3.8.2 (306087) HF Generator Enclosure, see Para. 3.7.3 33
3.8.3 (306080) HF Slotting Spindle 34
3.8.4 (306088) Orientation Device For HF Slotting Spindle 37
3.9 BAR RETENTION 38
3.9.1 (306084) Bar Retention Claws 38

4. FRONTWORKING OPTIONS 1

4.1 (306081) DIFFERENTIAL THREADING SPINDLE 1
4.2 (306039) 20MM-ID TOOLHOLDER 5
4.3 (306040) 25MM-ID TOOLHOLDER 8
4.4 (306011) S3-SPINDLE DRIVE 9
4.5 (306096) LONG DRILLING SPINDLE FOR ESX 25-COLLET 14

5. PICKOFF SPINDLE AND BACKWORKING OPTIONS 1

5.1 PICKOFF SPINDLE COLLET SLEEVES 1
5.1.1 (306134) F25-Collet Sleeve For DECO 26 Pickoff Spindle 1
5.1.2 (306135) F30-Collet Sleeve For DECO 26 Pickoff Spindle 1
5.1.3 (306127) F37-Collet Sleeve For DECO 26 Pickoff Spindle 1
5.2 PART EJECTOR WITH COLLET FLUSHING FOR DECO 20 2
5.2.1 (306151) Ejector with Spring 2
5.3 PICKOFF SPINDLE COLLET FLUSHING FOR DECO 20 5
5.3.1 (306152) Pickoff Spindle Collet Cleaning 5
5.4 FLUSHNG PNEUMATICS FOR DECO 20 & DECO 26 7
5.4.1 (306153) Flushing Pneumatics 7
5.5 PART EJECTOR WITH COLLET FLUSHING FOR DECO 26 9
5.5.1 (306154) Ejector with Spring 9
5.6 PICKOFF SPINDLE COLLET FLUSHING FOR DECO 26 13
5.6.1 (306155) Pickoff Spindle Collet Flushing 13
5.7 PICKOFF SPINDLE CROSS DRIVE 15

5.7.1 (306036) S5-Spindle Cross Drive 15
5.7.2 (306099) S5-Spindle Axial Drive 19
5.8 LONG-PART DISPOSAL 24
5.8.1 (306072) Long-Part Ejector For DECO 20 24
5.8.2 (306138) Long-Part Ejector For DECO 26 28
5.8.3 (306073) Long-Part Catcher 30
5.8.4 (306074) Long-Part Catcher Stand 34
5.8.5 (306076) Long-Part Disposal Pneumatics 40
5.8.6 (306120) Long-Part Equipment For DECO 20 41
5.8.7 (306136) Long-Part Equipment For DECO 26 41

6. MISCELLANEOUS OPTIONS 1

6.1 (306100) DEEP DRILLING UNIT 1
6.2 (216174) MINI-SENSOR 10
6.2.1 (305091) Mini-Sensor Pneumatics 12
6.2.2 (306063) Mini-Sensor Fittings 14
6.3 (306041) 15-BAR PUMP 15
6.4 (306118) CHIP CONVEYOR 19
6.5 (217751) OIL COOLER 28
6.5.1 Function 30
6.5.2 Description of use 30
6.5.3 Use and maintenance 30
6.5.4 Diagrams and electric wiring 30
6.6 MIST AND SMOKE CONTROL 31
6.6.1 (306089) Filtermist Unit 31

7. CUSTOMER-INTERFACE OPTIONS 1

8. INDEX 1

8.1 MACHINE ELEMENTS 1
8.2 SPARE PARTS 2

TORNOS BECHLER

1. GUIDEBUSH OPTIONS

1.1 HABEGGER ROLLER-GUIDEBUSH

1.1.1 (595798) HABEGGER Guidebush

- On Machines: 199223 & 199225

DECO 20&26

Components :

1010 Collet
1020 Collet sleeve
1030 Collet nut
1040 Pipe key
1050 Pipe key lever

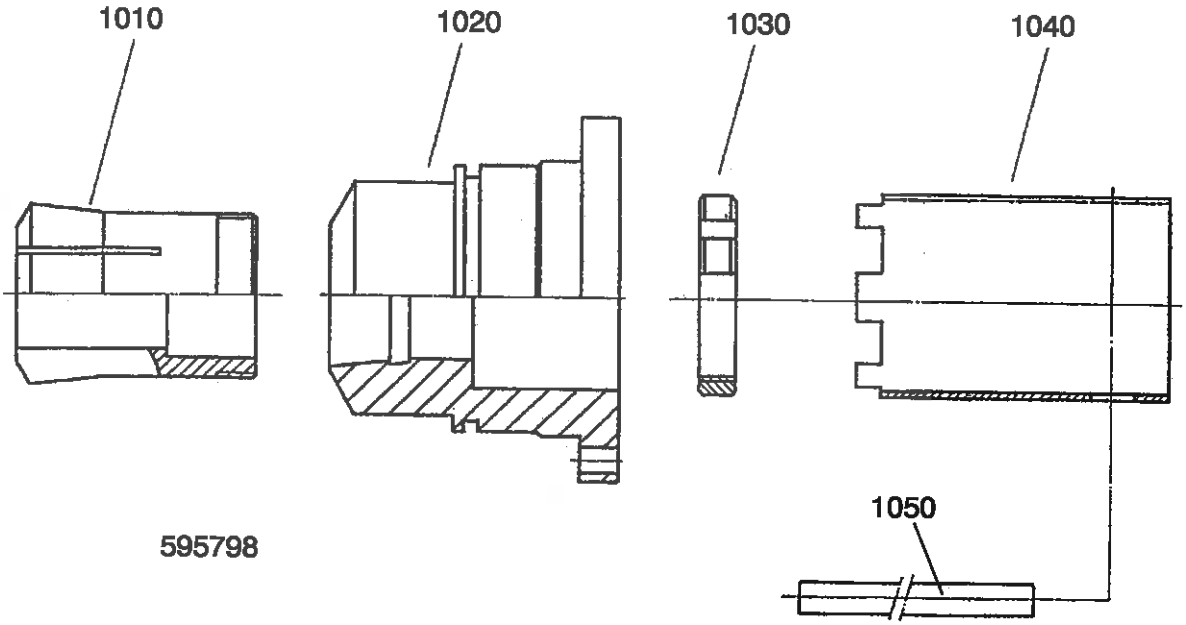

595798

HABEGGER GUIDEBUSH DESCRIPTION

- Habegger roller guidebush capacity, max.: 32 mm
- Guidebush collets :
  - ◇ No. collets in a set (delivered) : 5
  - ◇ Collet ØØ : 25, 30, 35, 40, 50 mm
  - ◇ Thru-collet lubrication : required
    for capacity, max. : 26 mm

Note : Each bar diameter requires a corresponding guidebush and pipe key.

▲ **Caution !**

- Unless you use the filter-equipped Guidebush Coolant System (see later in this chapter) with with your Habegger guidebushes, no warranty can be given for the latter.
- Align the guidebush mark with that of the bush-holder or adapter to allow for unhindered coolant supply.

  Follow strictly Habegger's instructions.

DATA

GUIDEBUSHES FOR DECO 20 & 26			
Type	**Collet ∅ [mm]**	**Bar ∅ [mm]**	**Notes**
CNC 25	25	5.68 - 7.36	For bar ∅∅ of 26.01 to 32.00 mm front end-adjusted guidebushes are recommended.
CNC 30	30	7.37 - 10.45	
CNC 35	35	10.46 - 14.07	
CNC 35	35	14.08 - 15.57	
CNC 35	35	15.58 - 18.10	
CNC 40	40	18.11 -	
CNC 50	50	..... - 26.00	

HABEGGER GUIDEBUSH OPERATION

- Bar guidance : over carbide rollers driven by bar rotation
- Adjusting bar play : by turning the nut at the end of the guidebush (just as for a conventional guidebush)
- Lubrication : with pre-filtered cutting fluid

Note : Do not employ the guidebush for bar diameters other than those indicated on the guidebush cover.

Front end-adjusted bushes are recommended for capacities > 26 to ≤ 32 mm.

DISMOUNT / MOUNT

DISMOUNTING / MOUNTING HABEGGER GUIDEBUSH	
What to do ?	How ? What for ? Notes
Dismounting • Unscrew and remove the six fastening screws. • Take down the guidebush.	
Mounting • Fit the guidebush in place. • Screw in and tighten the six fastening screws. • Fit the drive belt.	For belt change, see (306027) Guidebush Drive later in this chapter or Index.
Attention ! • Check for the headstock carriage travel to avoid collisions of the headstock spindle with the guidebush.	See Programming Instructions 300412, Establishing Waste Length: Para. 4.3.1 for DECO 20 Para. 4.3.2 for DECO 26

CHANGE

CHANGING HABEGGER GUIDEBUSH	
Dismounting • Undo Nut 1030 ... • Pull out the guidebush.	... with Pipe Key 1040.
Mounting • Fit another guidebush inside Collet 1010. • Screw on and tighten Nut 1030 ...	... with Pipe Key 060.

1.2 (306057) GUIDEBUSH COOLANT SYSTEM

Components :

010	Filter support	140	Joint
100	Filter	170	Joint

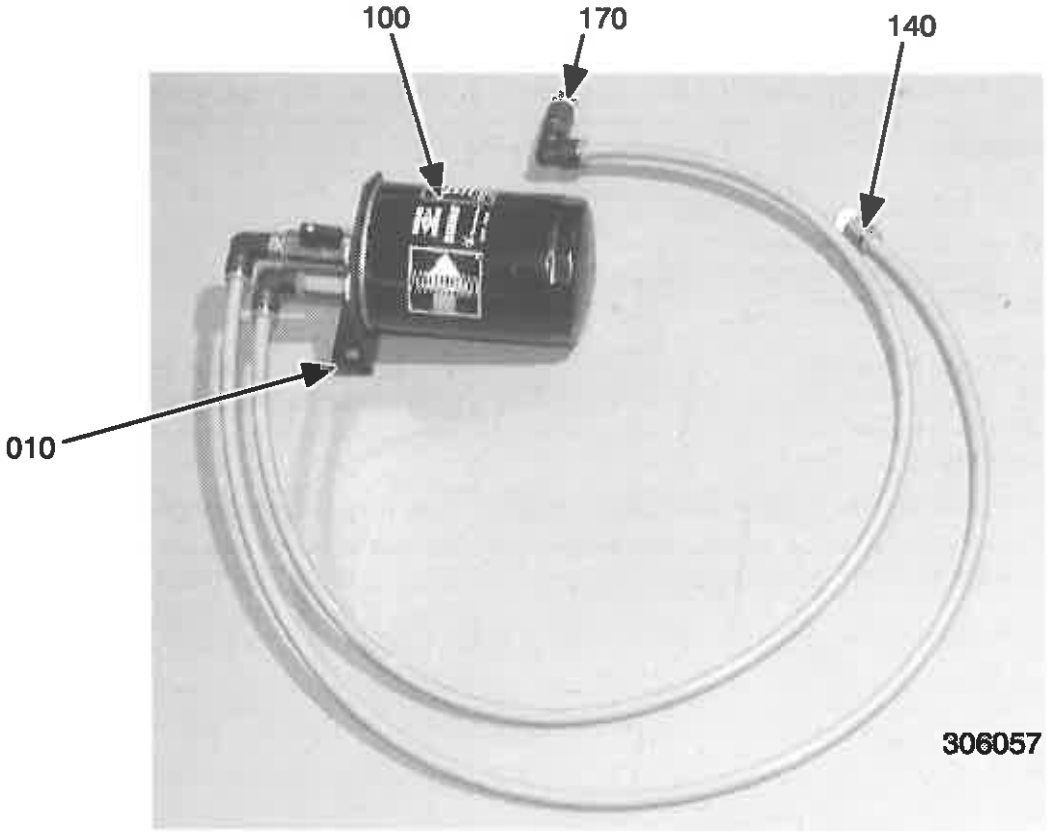

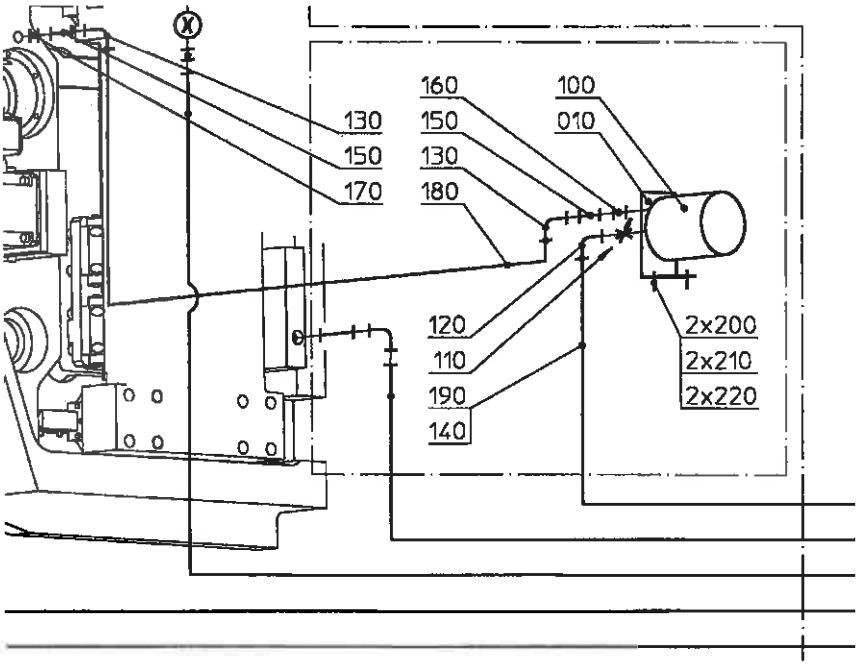

GUIDEBUSH COOLANT SYSTEM DATA

- Filter mesh size : 20 µm
- Service pressure, max.: 10 bar

GUIDEBUSH COOLANT SYSTEM OPERATION

- Regular lubrication : between guidebush collet and bar, for reduction of jamming risks
- Coolant flowrate : adjustable before filtration

⚠ Caution !

Remove the cutting oil conduit from the vertical support before using coolant-free guidebushes. Mishandling of the control valve could flood the bush bearings.

See also ;
- (306005) Vertical
- (306023) Coolant Pump
- (306024) Standard Coolant System

in your Instructions: INSTALLATION - OPERATION - MAINTENANCE

for DECO 20:	Chapters 3 and 6	Instructions 300401
for DECO 26:	Chapters 4 and 7	Instructions 300441

INSTALL

INSTALLATION OF GUIDEBUSH COOLANT SYSTEM	
What to do ?	How ? What for ? Notes
• Fit the filter on the NC cabinet and fasten it with two Screws 200 • Screw Joint 140 inside the tube. • Screw Joint 170 onto the vertical (support).	

CLEAN

CLEANING GUIDEBUSH COOLANT FILTER	
Maintenance Interval :	Clean the guidebush coolant filter weekly or at least every 50 hours' operation.
What to do ?	How ? What for ? Notes
• Take down the filter. • Clean or change the filter. • Fit the filter in place.	

SPARE PARTS

Item		Designation	No.
-	306057	Complete coolant system	1
100	215356	Filter " HC 6 mic 10" 750.127.3	1

1.3 LIVE GUIDEBUSHES

1.3.1 (306078) Live 25.4mm Guidebush

- On Machines: 199223 & 199225 DECO 20&26

DECO 20 with Guidebush Drive (306027)
DECO 26 with Guidebush Drive (306113)

Components :

010	Spindle	110	Key
070	Tie	270	Tie lock screws
240	O-ring	1010	Guidebush 34mm-shaft collet

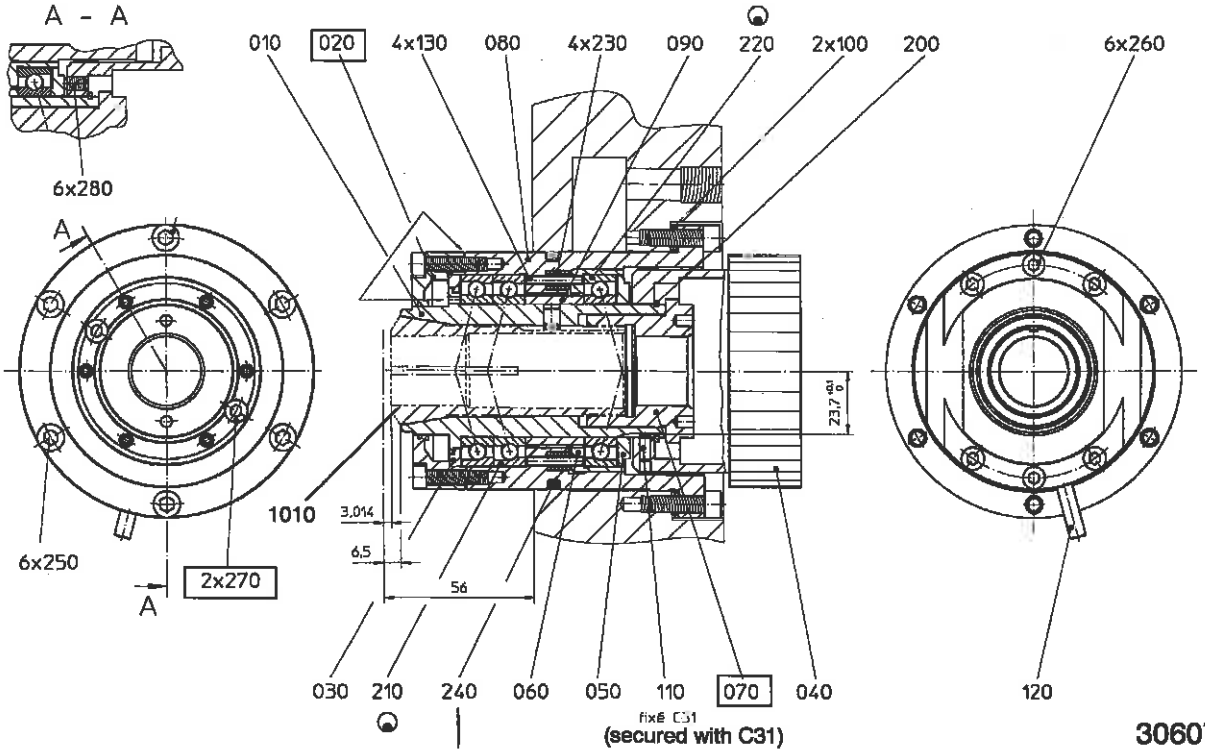

This O-ring to be fitted with the compressed-air supply only.

SERVICE TOOLING FOR LIVE 25.4mm-GUIDEBUSH

Item		Designation	Application
–	477558	Setting Tool	For (306028) and (306078) Live Guidebushes

DATA

LIVE 25.4mm-GUIDEBUSH DATA		
• Speed, max.:		10000 rpm
• Guidebush collets :	Shaft 34 mm	DUNNER B227 MEISTER 227 T NEUKOMM 227
• Bar capacity :	round: hex: square :	26 mm 22 mm 18 mm
• Angular orientation :		over guidebush drive
• Length :	overall: J-dimension :	145 mm 120 mm

LIVE 25.4mm-GUIDEBUSH OPERATION

- Bar guidance : by drawback collet precise and very close to the tool
- Guidebush spindle support : two spring-preloaded oblique-contact high-precision bearings which are pregreased for life
- Drive : without backlash, over a timing belt
- Guidebush collet alignment : with a key
- Guidebush protection : by compressed-air supply
  for DECO 20: see (306021) Standard Pneumatics, Para. ... in your Instruct's 300401
  for DECO 26: see (306021) Standard Pneumatics in your Instructions 300441 Index.

DISMOUNT / MOUNT

What to do ?	How ? What for ? Notes
DISMOUNTING LIVE 25.4mm-GUIDEBUSH	
To start with : Throw off the drive belt. See your Instructions 300401, Para. 9.4 for DECO 20 Guidebush Drive (306027); for DECO 26 Guidebush Drive (306113) later in this chapter.	
• Unscrew and remove six Screws 250.	
• Take down the guidebush.	
• Take down the compressed-air supply.	See the air supply ref. above this table.
MOUNTING LIVE 25.4mm-GUIDEBUSH	
To start with : Fit (306027) / (306113) Guidebush Drive, see ref. above in this table. Fit the compressed-air supply. See the air supply ref. above this table.	
• Set the guidebush in place.	
• Screw in six Screws 250.	
• Fit the drive belt.	See the guidebush drive reference above.
▲ Caution !	
• Check for the headstock carriage travel to avoid collisions of the head-stock spindle with the guidebush.	See also Establishing Waste Length, Para. 3.4 in your Instr's 300412: Interface Requirement For Stock Tube / Barfeeder
• Make sure the air supply is connected.	See the air supply ref. above this table.

What to do ?	How ? What for ? Notes

CHANGE

CHANGING COLLET FOR LIVE GUIDEBUSH	
To start with : Put the machine in Setting Mode. Move the headstock slide in its rearmost position	
Dismounting • Hold Wheel 040 by hand to lock the spindle. • Undo and remove 2 Screws 270. • Undo and remove Tie 070. • Pull out Collet 1010.	• Use Setting Tool 477558.
Mounting • Fit a new Collet 1010. • Screw in Tie 070 without tightening it. • Screw in two Screws 270 ...	• Align the collet keyway with Key 110. • Use Setting Tool 477558. ... without tightening them.
Adjusting • Put a bar into the guidebush collet and tighten Tie 070 ... • Screw in and tighten two Screws 270.	... to adjust the collet clearance.

STANDARD REPAIR

STANDARD REPAIR FOR LIVE GUIDEBUSH	
Note : Live 25.4mm-Guidebush (306078) is eligible for STANDARD REPAIR service.	
• Dismount the guidebush.	For dismounting see overleaf.
• Proceed to replace it ... (Send it over to TB)	... acc. to Standard Repair service procedure.
• Mount the repaired guidebush.	For mounting, see overleaf.

SPARE PARTS

Item		Designation	No.
020	562045	Cover	1
070	562316	Tie	1
270	020175	Cylindrical hex. head screw M5 x 16	2

1.3.2 (306112) Live 32mm Guidebush

- On Machines: 199223 & 199225

DECO 20&26

DECO 20 with Guidebush Drive (306027)
DECO 26 with Guidebush Drive (306113)

Components :

010	Threaded tube	220	Guidebush fastening screws
020	Guidebush spindle	230	O-ring
080	Tie	1010	Key
205	Tie lock screws	1020	Guidebush collet 229T

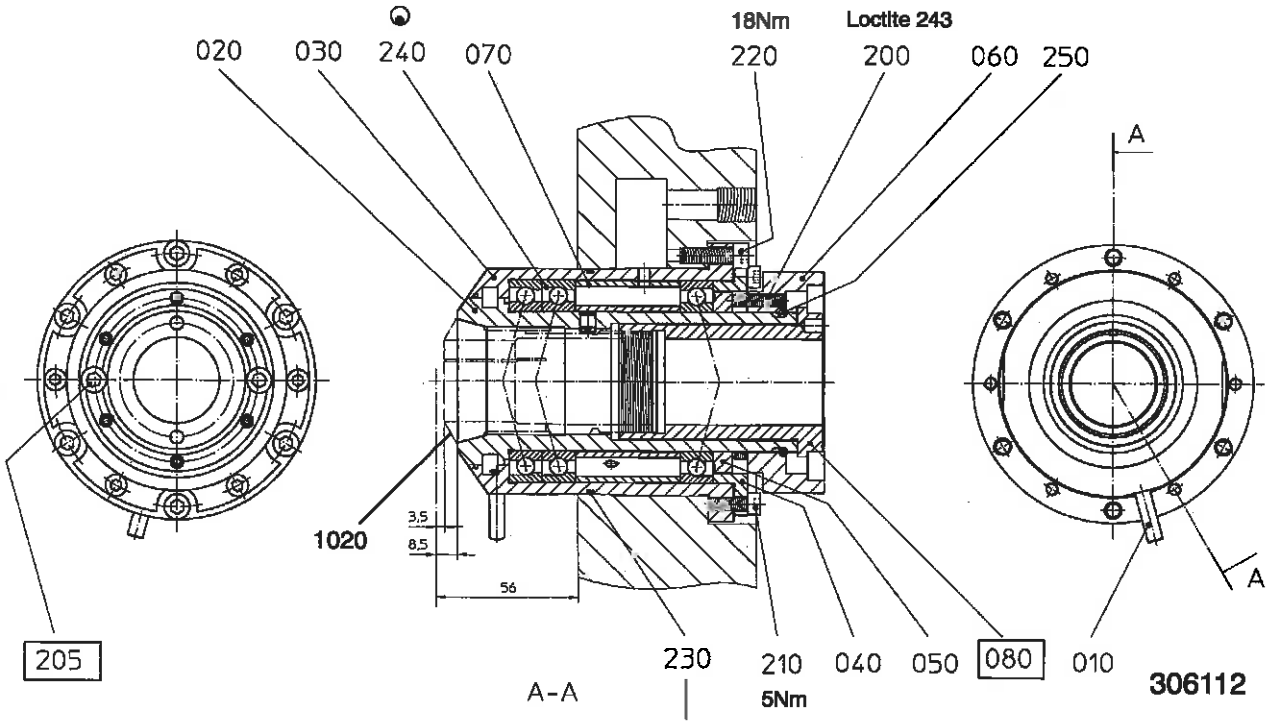

This O-ring to be fitted with the compressed-air supply only.

EQUIPMENT

Item		Designation	Notes
-	306113	Guidebush drive	Required for Live Guidebush (306112)

SERVICE TOOLING FOR LIVE 32mm-GUIDEBUSH

Item		Designation	Application
-	562516	Setting Tool	For Live Guidebush (306112)

DATA

LIVE 32mm-GUIDEBUSH DATA		
• Speed, max.:		8000 rpm
• Guidebush collets :	Shaft 42 mm	MEISTER 229 T NEUKOMM MR 32 (28.001)
• Bar capacity :	round: hex: square :	32 mm 27 mm 22 mm
• Angular orientation :		over guidebush drive
• Length :	overall: J-dimension :	152.5 mm 160 mm

LIVE 32mm-GUIDEBUSH OPERATION

- Bar guidance : by drawback collet precise and very close to the tool
- Guidebush spindle support : two spring-preloaded oblique-contact high-precision bearings which are pregreased for life
- Drive : without backlash, over a timing belt
- Guidebush collet alignment : with a key
- Guidebush protection : by compressed-air supply

see (306021) Standard Pneumatics in your Instructions 300441 Index.

DISMOUNT / MOUNT

DISMOUNTING LIVE 32mm-GUIDEBUSH	
To start with : Throw off the drive belt. For belt change, see (306113) Guidebush Drive further below.	
What to do ?	How ? What for ? Notes
• Unscrew and remove six Screws 210.	
• Take down the guidebush.	
• Take down the compressed-air supply.	See the compressed-air supply reference above this table.

What to do ?	How ? What for ? Notes

MOUNTING LIVE 32mm-GUIDEBUSH	
To start with : Fit (306113) Guidebush Drive, see further below. Fit the guidebush compressed-air supply. See the compressed-air supply reference above the table opposite.	
• Set the guidebush in place. • Screw in six Screws 210. • Fit the drive belt.	For belt change/fitting, see (306113) Guidebush Drive further below.
▲ **Caution !** • Check for the headstock carriage travel to avoid collisions of the headstock spindle with the guidebush.	See also Establishing Waste Length, Para. 3.4 in your Instructions 300412: Interface Requirement For Stock Tube / Barfeeder
• Make sure the compressed-air supply is connected.	See the compressed-air supply reference above the table opposite.

CHANGE

CHANGING COLLET FOR LIVE GUIDEBUSH	
To start with : Put the machine in Setting Mode. Move the headstock slide in its rearmost position	
Dismounting • Hold Wheel 060 by hand to lock the spindle. • Undo and remove 2 Screws 205. • Undo and remove Tie 080. • Pull out Collet 1020.	• Use Setting Tool 562516.
Mounting • Fit a new Collet 1020. • Screw in Tie 080 without tightening it. • Screw in two Screws 205 ...	• Align the collet keyway with Key 1010. • Use Setting Tool 562516. ... without tightening them.
Adjusting • Put a bar into the guidebush collet and tighten Tie 080 ... • Screw in and tighten two Screws 205.	... to adjust the collet clearance.

STANDARD REPAIR

STANDARD REPAIR FOR LIVE GUIDEBUSH	
Note : Live 32mm-Guidebush (306112) is eligible for STANDARD REPAIR service.	
What to do ?	How ? What for ? Notes
• Dismount the guidebush.	For dismounting, see further above.
• Proceed to replace it ... (Send it over to TB)	... acc. to Standard Repair service procedure.
• Mount the repaired guidebush.	For mounting, see overleaf.

SPARE PARTS

Item		Designation	No.
080	562495	Tie	1
205	020198	Cylindrical hex. head screw M6 x 16	2

1.4 GUIDEBUSH DRIVES

1.4.1 (306027) Guidebush Drive For DECO 20

- On Machine: 199223 DECO 20

1.4.2 (306113) Guidebush Drive For DECO 26

- On Machine: 199225 DECO 26

Components :

040 Linear-bearing shaft
050 Expanding roller
060 Toothed wheel
090 Toothed wheel
340 Timing belt (guidebush)
370 Timing belt (main spindle)

320

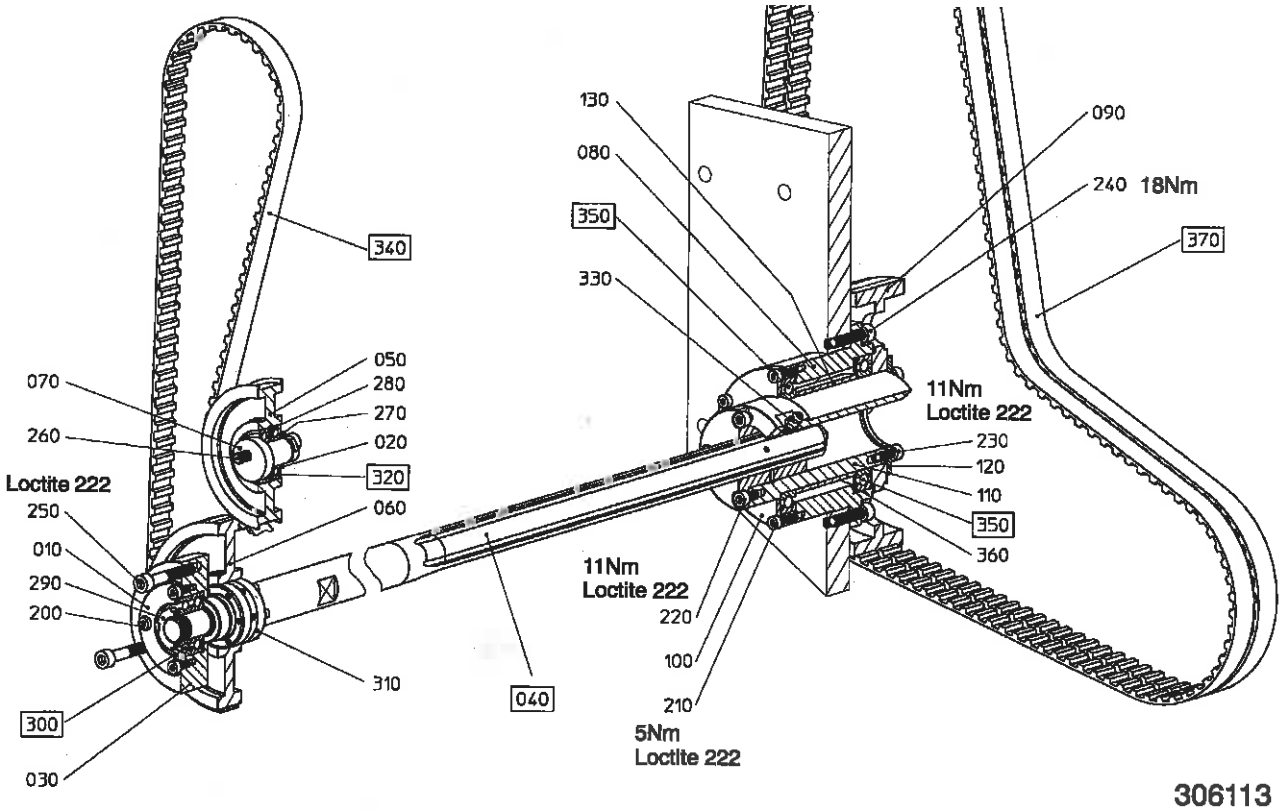

306113

DECO 26 GUIDEBUSH DRIVE OPERATION

- Guidebush / main spindle synchro : over preloaded profiled shaft; synchronous belt transmission without backlash
- Angular guidebush orientation : with Wheel 100

⚠ **Caution !**

- Clean the collet regularly, i.e. as often as the stock bar soiling requires it.

For good operation of the main spindle collet :

- Set at least one of the two control pressures at 0 bar.
- Set the pressures within the allowed limits.

Note : You can have your main headstock overhauled or replaced by Standard Repair Service of Tornos-Bechler.

DATA

DECO 26 GUIDEBUSH DRIVE DATA		
• Speed :	MAX	6400 RPM
• Linear-bearing shaft :	THK	LBF25 (Order Ref. Dwg 562057)
• Spindle - drive ratio :		i = 1.25 : 1

EQUIPMENT FOR DECO 26 GUIDEBUSH DRIVE

Item		Designation	Notes
-	305042	Grease pump	See in your Instructions 300441 Index.

DISMOUNT

DISMOUNTING DECO 26 GUIDEBUSH DRIVE	
What to do ?	How ? What for ? Notes
• Remove the guards ...	... if required.
• Relax the belts and take them off the wheels.	
• Retract the headstock carriage (Z1).	
• Unscrew four Screws 230 ...	...to retract the linear bearing on its Shaft 040.
• Unscrew four Screws 240 ...	... to remove the rear bearing.
• Unscrew three Screws 250 ...	... to shift the shaft backwards.
• Throw off the belt.	
• Remove the expanding roller.	
Tensioning	In your Instructions 300441: see Para. 3.7 for belt tensioning and (306102) S1-Spindle Drive, Para. 4.6 for belt change.
• Shift the headstock spindle expanding roller to tension the spindle belt.	
• Mount the guards ...	... if required.

What to do ?	How ? What for ? Notes

MOUNT

MOUNTING DECO 26 GUIDEBUSH DRIVE	
• Remove the guards ...	... if required.
• Relax the headstock spindle belt.	
• Retract completely the headstock carriage (Z1).	
• Pass Belt 340 around Shaft 040.	
• Put the front bearing in its seat.	
• Fit the rear bearing of the drive.	
• Shift the linear bearing into its Driving Spindle 110 and tighten Screws 230.	
• Advance completely the headstock carriage (Z1).	
• Tighten Screws 250.	
• Put Belt 370 on its wheels.	
• Fit the expanding rollers and tension the belts ...	... by pivoting the eccentrics.
• Mount the guards ...	... if required.

ADJUST

TENSIONING TIMING BELT For DECO 26 Guidebush Drive	
• Tension the belt with the expanding roller.	For belt tesnioning, see Para. 3.7 in your Instructions 300441.

ALIGN

ANGULAR ALIGNMENT of DECO 26 Headstock Spindle and Live Guidebush	
• Carry out the angular alignment with Wheel 100.	
• Loosen the screws of Clamping Ring 310.	
• Align the guidebush with the spindle:	over Wheel 060
• Tighten the screws of Clamping Ring 310.	

What to do ?	How ? What for ? Notes

GREASE

MANUAL GREASING OF DECO 26 GUIDEBUSH DRIVE	
Maintenance Interval : Grease the guidebush drive semi-annually or at least every 1000 hours' operation. **To start with :** Fill up the grease pump (305042), see (305042) Grease Pump in your Instructions 300441 Index.	
• Keep greasing through **Nipple 330** ...	... until the grease comes out of the linear bearing.

CHANGE

CHANGING DECO 26 GUIDEBUSH DRIVE BELT	
Dismounting	
• Loosen Screw 260 ...	... to relax the belt.
• Unscrew three Screws 250.	
• Shift the shaft backwards.	
• Throw off the belt.	
Mounting	
• Pass another belt through the front of the bearing.	
• Put the belt on the wheels.	
• Advance completely the headstock carriage (Z1).	
• Fix the front bearing against the vertical.	
• Tension the belts ...	... by pivoting Eccentric 020.
• Tighten screws 260.	

SPARE PARTS

Item		Designation	No.
040	562057	Linear movement bearing	1
300	209572	Angular contact bearing 7202- C - A - L - U	2
320	216156	Grooved ball bearing SKF 6002 - 2RZ	2
340	216931	Belt Synchrof 16/T10/960	1
350	216941	Grooved ball bearing SKF 61911	2
370	217273	Belt Synchrof SKF 61911	1

TORNOS BECHLER

2. SPINDLE OPTIONS

2.1 (306064) Lightweight Spring For DECO 20

- On Machine: 199223

DECO 20

DECO 20 with Spindle (306004) The lightweight spring is of modular design.

Components :

• **Assembly Tooling:**	020	Rod
	030	Screwed sleeve
	100	Nut
	120	Roller bearing
• **Spring System :**	010	Ring
	110	SCHNORR washers
	1010	Spring bushing
	1020	Elastic SEEGER ring

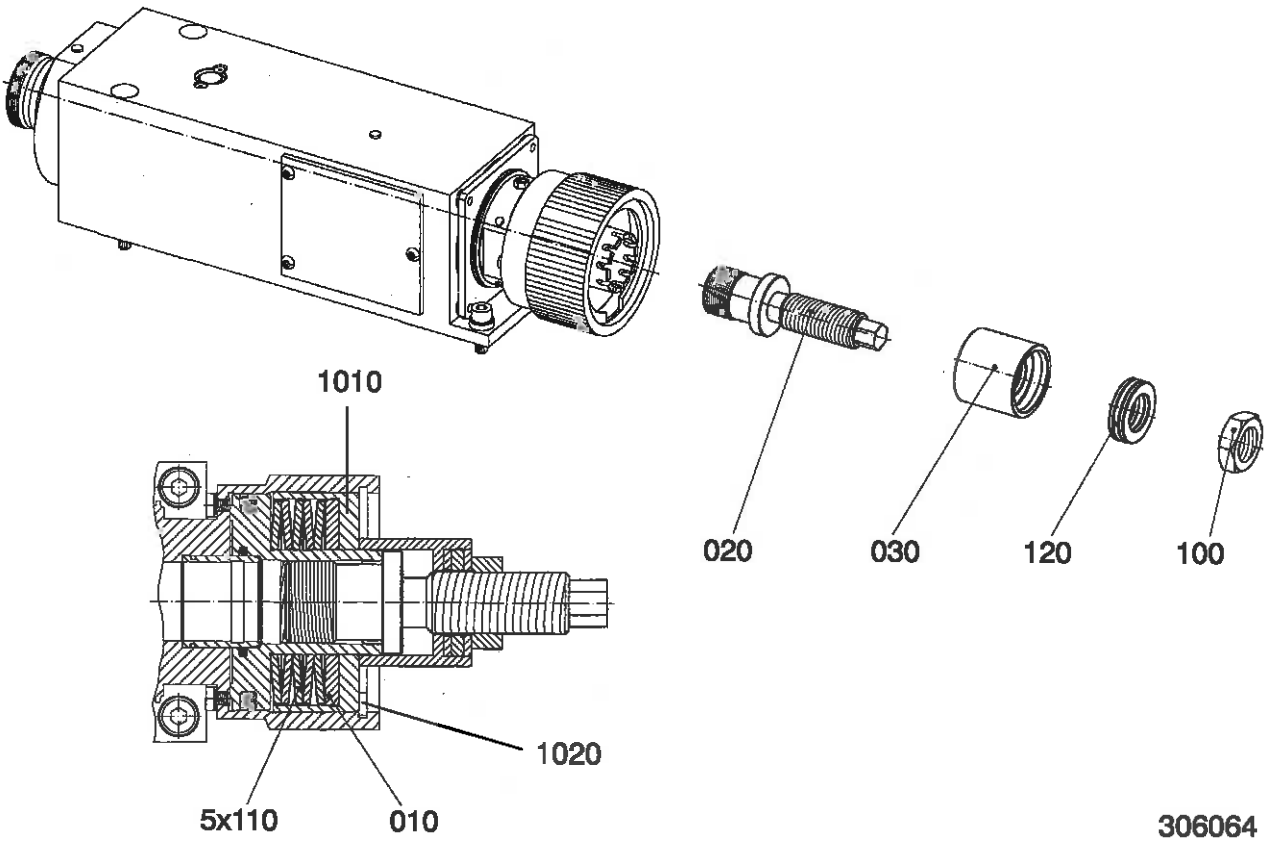

DECO 20 LIGHTWEIGHT SPRING DATA & OPERATION

- Spring washer F rating : 700 daN
- Ring thickness : 5.5 mm
- Mounting : with Assembly Tooling 020, 030, 100 and 120 delivered with the machine
- Function : Changing the chucking characteristics to allow for soft clamping of small diameter parts in extended-nose collets

CHANGE

CHANGING COLLET SPRING FOR DECO 20

To start with : Remove the thrust tube from the spindle.
Disconnect air supply.

What to do ?	How ? What for ? Notes
Dismounting	
• Screw in Rod 020 in the spindle.	
• Fit Roller Bearing 120, Screwed Sleeve 030, Nut 100 on Rod 020.	• Screw Sleeve 030 until it leans against Spring Bushing 1010.
• Tighten Nut 100 by approx. 0.5 mm ...	... to release the elastic SEEGER ring.
• Remove SEEGER Ring 1020.	
• Unscrew Nut 100.	
• Relax and remove the spring washers and Spring Bushing 1010.	
Mounting	
• Fit Spring Washers 110 and Ring 010 in the spindle.	
• Fit Spring Bushing 1010, Roller Bearing 120, Screwed Sleeve 030, Nut 100 on Rod 010.	
• Screw Nut 100 ...	... to compress the spring.
• Fit in place SEEGER Ring 1020.	
• Remove Assembly Tooling 020, 030, 100 and 120.	
• Fit and set the thrust tube.	See Setting Thrust Tube, Para. 4.3 in your Instructions 300401.

TORNOS BECHLER

2.2 COLLET SLEEVES

2.2.1 (306042) F20-Collet Sleeve For DECO 20

- On Machine: 199223

DECO 20

DECO 20 with Main and Pickoff Spindle (306004)

Components :

010 Nose nut
020 Collet sleeve
030 Screwed key
040 Collet spring
1010 SCHAUBLIN F collet

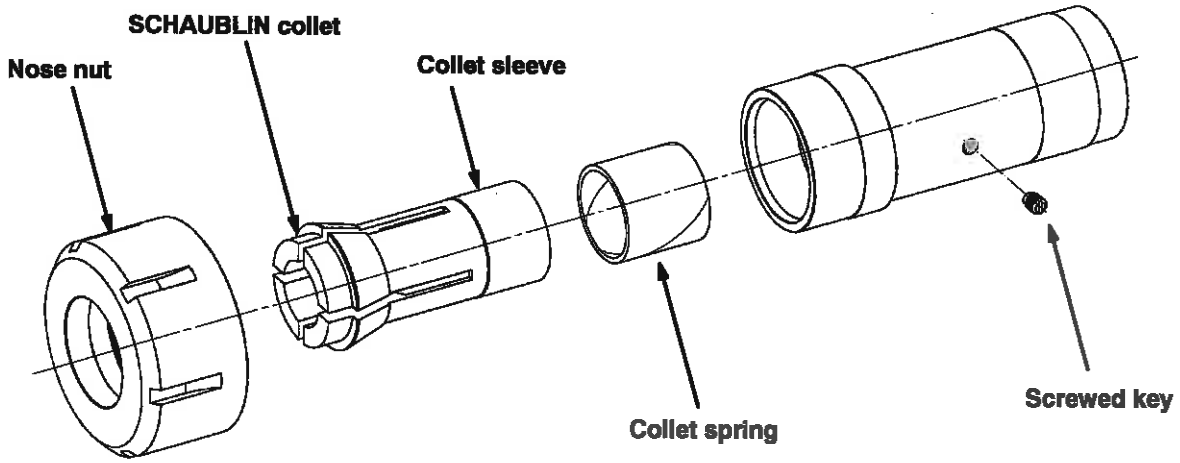

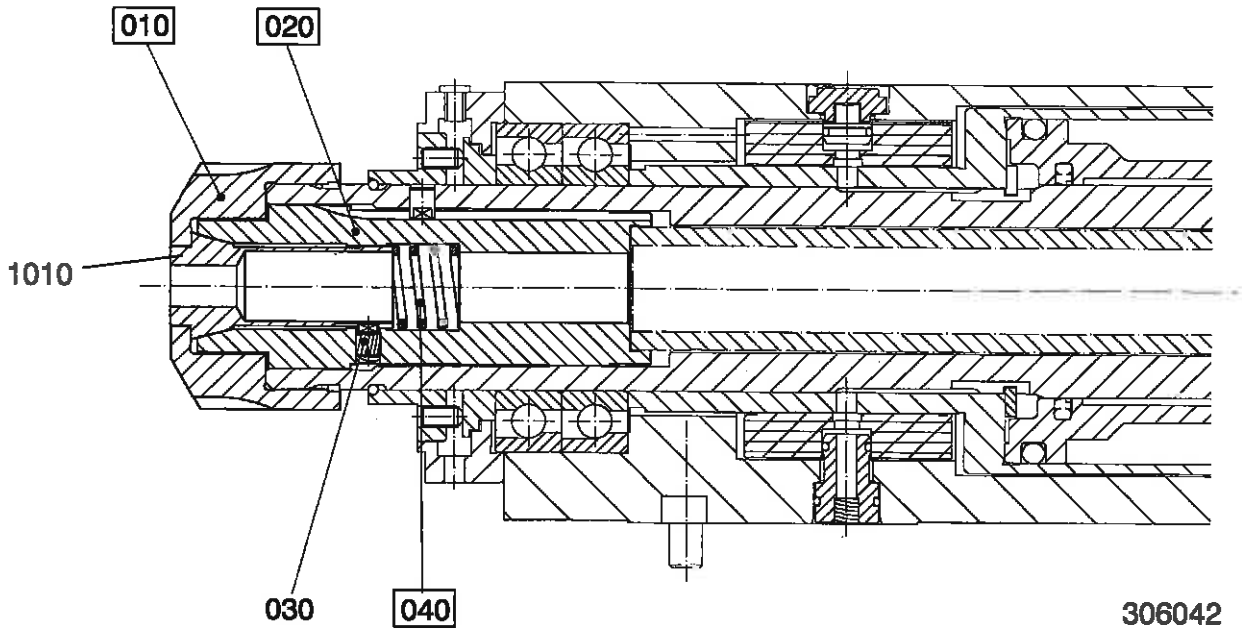

306042

DATA

F20-COLLET SLEEVE DATA

• Collet :	SCHÄUBLIN	F20 No. 76-201
• Bar capacity :	round :	16 mm
	hex :	14 mm
	square :	11 mm

SPARE PARTS

Item		Designation	No.
010	562037	Nose nut	
020	562038	Collet sleeve	
040	215499	Collet spring	

2.2.2 (306077) F30-Collet Sleeve For DECO 20

- On Machine: 199223

DECO 20

DECO 20 with Main and Pickoff Spindle (306004)

Components :

010 Nose nut
020 Collet sleeve
030 Screwed key
040 Collet spring
1010 SCHAUBLIN F collet

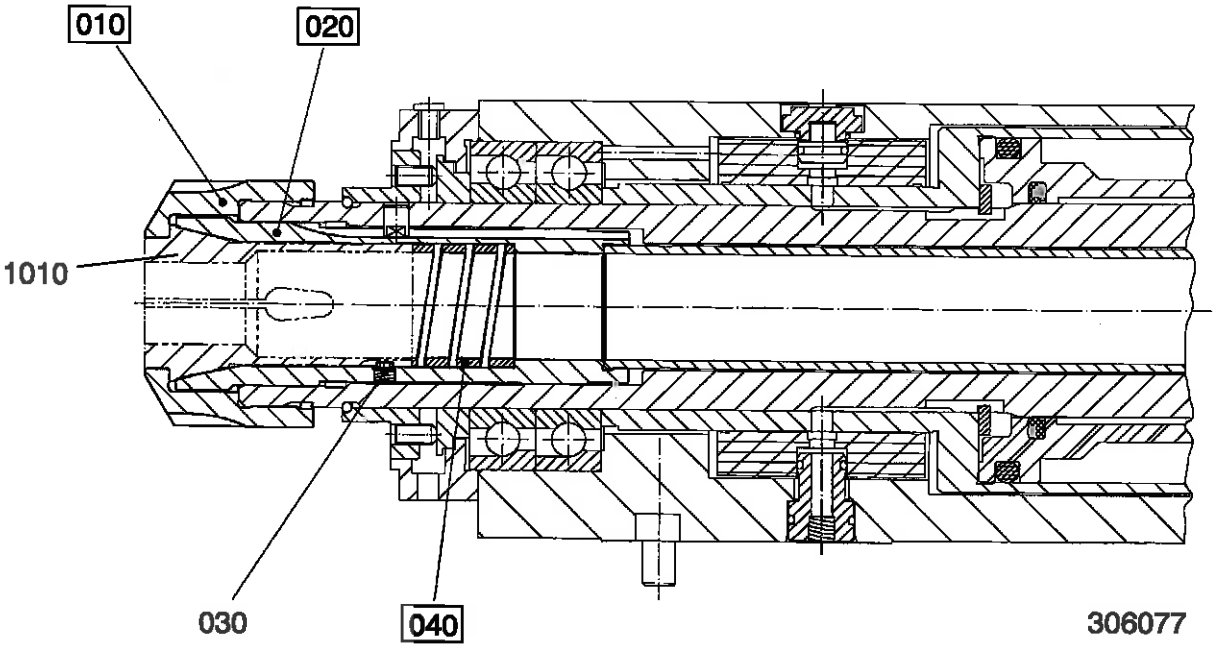

DATA

F30-COLLET SLEEVE DATA

• Collet :	SCHAUBLIN	F30 No. 76-101
• Bar capacity :	round :	25.4 mm
	hex :	22 mm
	square :	18 mm

SPARE PARTS

Item		Designation	No.
010	562528	Nose nut	1
020	562529	Collet sleeve	1
040	212372	Collet spring	1

2.2.3 (306119) F25-Collet Sleeve For DECO 26 Main Spindle

- On Machine: 199225

DECO 26

with Spindle (306094)

Components :

010 Collet sleeve
020 Nose nut
030 Screwed key
040 Collet spring
1010 SCHAUBLIN F collet

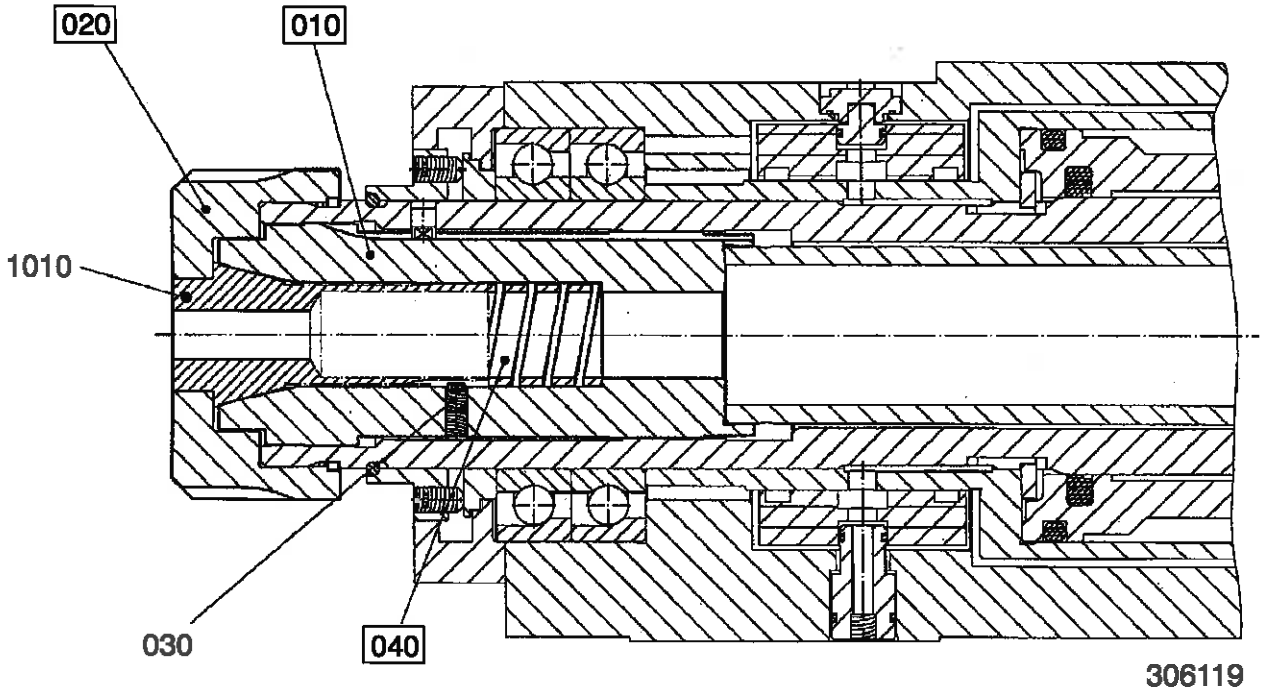

306119

DATA

F25-COLLET SLEEVE DATA

• Collet :	SCHÄUBLIN	F25 No. 76-64
• Bar capacity :	round :	1.5 to 20.5 mm
	hex :	17 mm
	square :	15 mm

SPARE PARTS

Item		Designation	No.
010	562505	Collet sleeve	1
020	562339	Nose nut	1
040	212371	Collet spring	1

2.2.4 (306104) F30-Collet Sleeve For DECO 26 Main Spindle

- On Machine: 199225

DECO 26

with Spindle (306094)

Components :

010 Nose nut
020 Collet sleeve
030 Screwed key
040 Collet spring
1010 SCHAUBLIN F collet

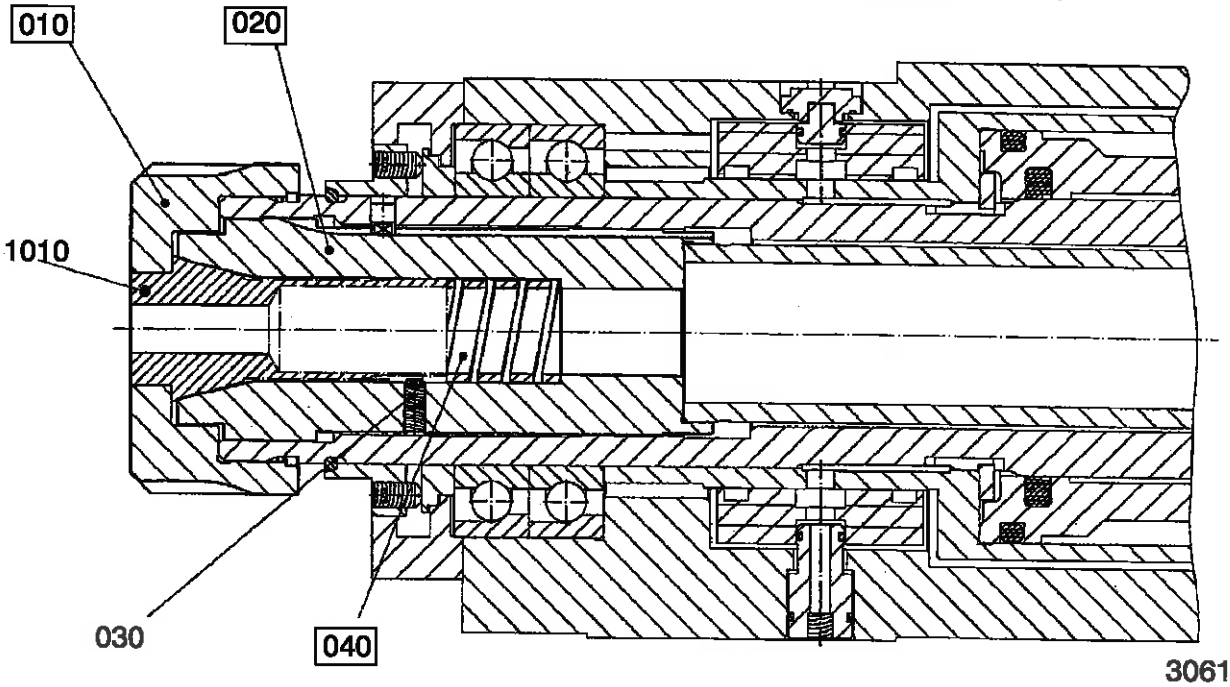

306104

DATA

F30-COLLET SLEEVE DATA

• Collet :	SCHÄUBLIN	F30 No. 76-101
• Bar capacity :	round :	4 to 26 mm
	hex :	22 mm
	square :	18 mm

SPARE PARTS

Item		Designation	No.
010	562463	Nose nut	1
020	562464	Collet sleeve	1
040	212372	Collet spring	1

2.2.5 (306095) F37-Collet Sleeve For DECO 26 Main Spindle

- On Machine: 199225 DECO 26

with Spindle (306094)

Components :

010 Collet sleeve
020 Nose nut
030 Screwed key
040 Collet spring
1010 SCHAUBLIN F collet

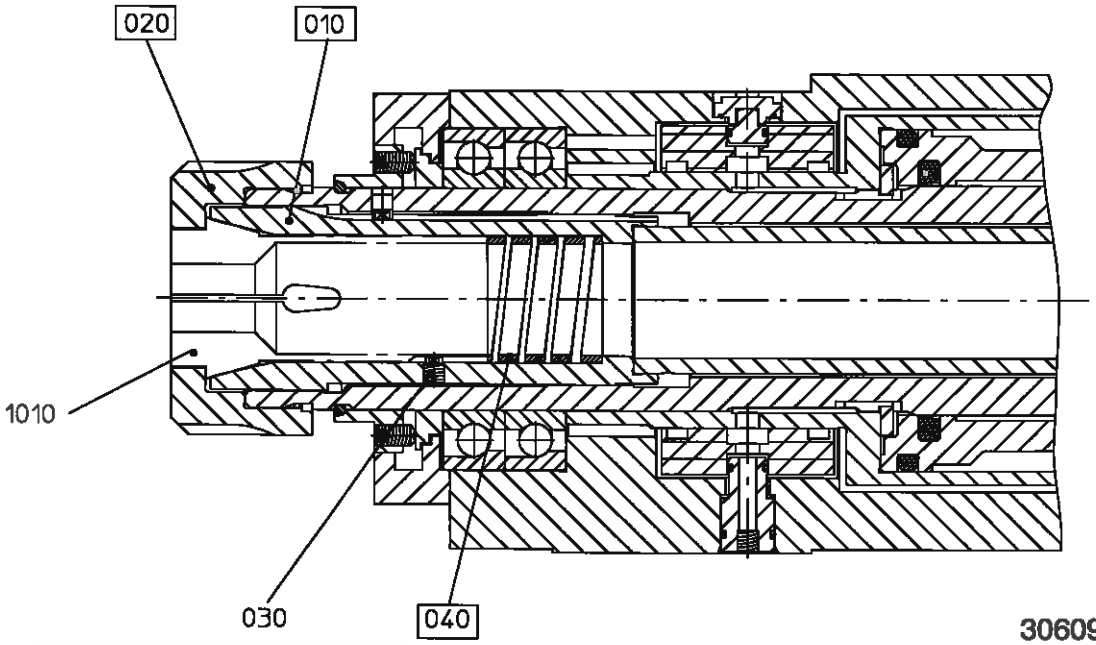

306095f1

F25-COLLET SLEEVE DATA

• Collet :	SCHÄUBLIN type	F25 No. 76-740 2 002 026
• Bar capacity :	round :	5,50 to 32 mm
	hex :	27 mm
	square :	22 mm

OPERATION: The collet works without axial motion so as to guarantee a great precision.

SPARE PARTS

Item		Designation	No.
010	562340	Collet sleeve	1
020	562339	Nose nut	1
040	200277	Collet spring	1

TORNOS BECHLER

2.3 CHUCKING FORCE

2.3.1 (306031) Variable Chucking Force System

- On Machine: 199223 & 199225

DECO 20&26

Components :

120 Pressure reducing valve

140 Air escape valve

150 Manometer

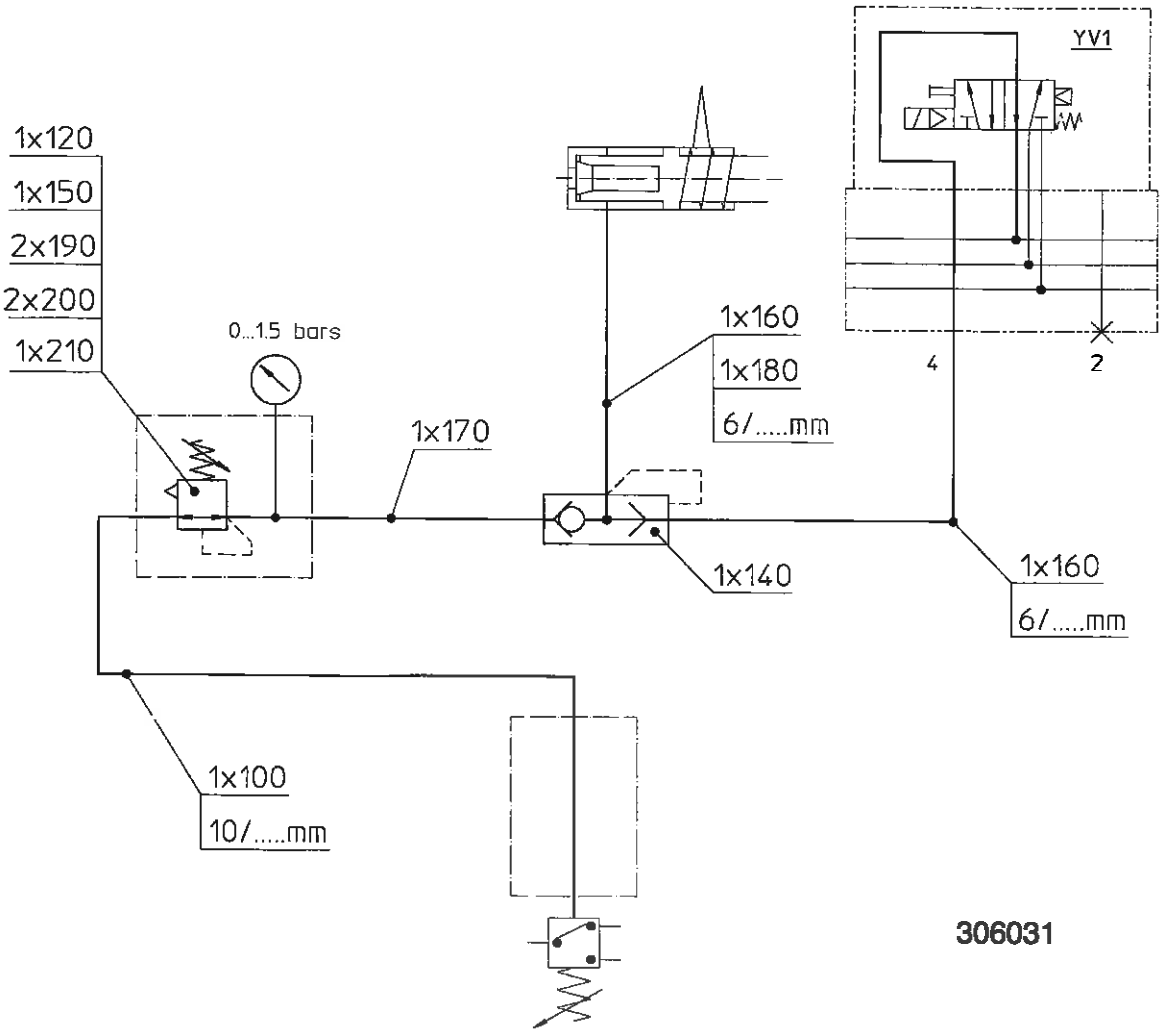

306031

▲ SAFETY

The S1-spindle collet may not open if the adjusted pressure exceeds the figure permitted for a particular spindle type.

MOUNT

VARIABLE CHUCKING FORCE SYSTEM INSTALLATION	
To start with : Install the headstock. For details, see Para. 3.4 in your Instructions 300401 for DECO 20 Para. 4.4 in your Instructions 300441 for DECO 26	
What to do ?	How ? What for ? Notes
Mounting	
• Fix in place the pre-assembled unit :	i.e. Pressure Reducing Valve 120, Discharge Valve 140, Manometer 150 and various connections • Use two Nuts 200 for fixing.
• Connect various pipes.	

CHUCKING FORCE SYSTEM OPERATION

- Collet opening : at full pressure of 6 bar
- Pressure setting : with collet closed
  The pressure pushes the collet spring out of the spindle collet.

ADJUST

SETTING CHUCKING FORCE PRESSURE	
What to do ?	How ? What for ? Notes
Setting	
• Keep screwing up / down the head of Pressure Reducing Valve 120 to set the pressure ...	... until satisfied.

2.4 MECHANICAL LOCKING FOR SPINDLE

2.4.1 (306122) Positioned-Spindle Locking System

- On Machine: 199223

DECO 20

Components :

- **Locking System :**

030	Notched disk
040	Mounting plate
050	Lock
060	Cylinder cover
070	Cylinder
080	Spindle guard
090	Rear spindle-spring bushing, with bores
100	Guiding-Tube Support 100
200	Screwed sealing plug
220	Disk fastening screw
230	Cylinder fastening screw
250	Locking-mechanism fastening screw
260	Raised head screw

- **Assembly Tooling :**

010	Rod
020	Screwed sleeve
240	Nut
280	Roller bearing

SPINDLE LOCKING DESCRIPTION & DATA

- Function : improving precision and rigidity of C-axis spindle positioning
- Mounting : optionally on main and pickoff headstock
- Standard notched disk : 24 x 15°-divisions
- Positioning precision : ≤ 0.1°
- Locking torque : 40 Nm

TORNOS BECHLER

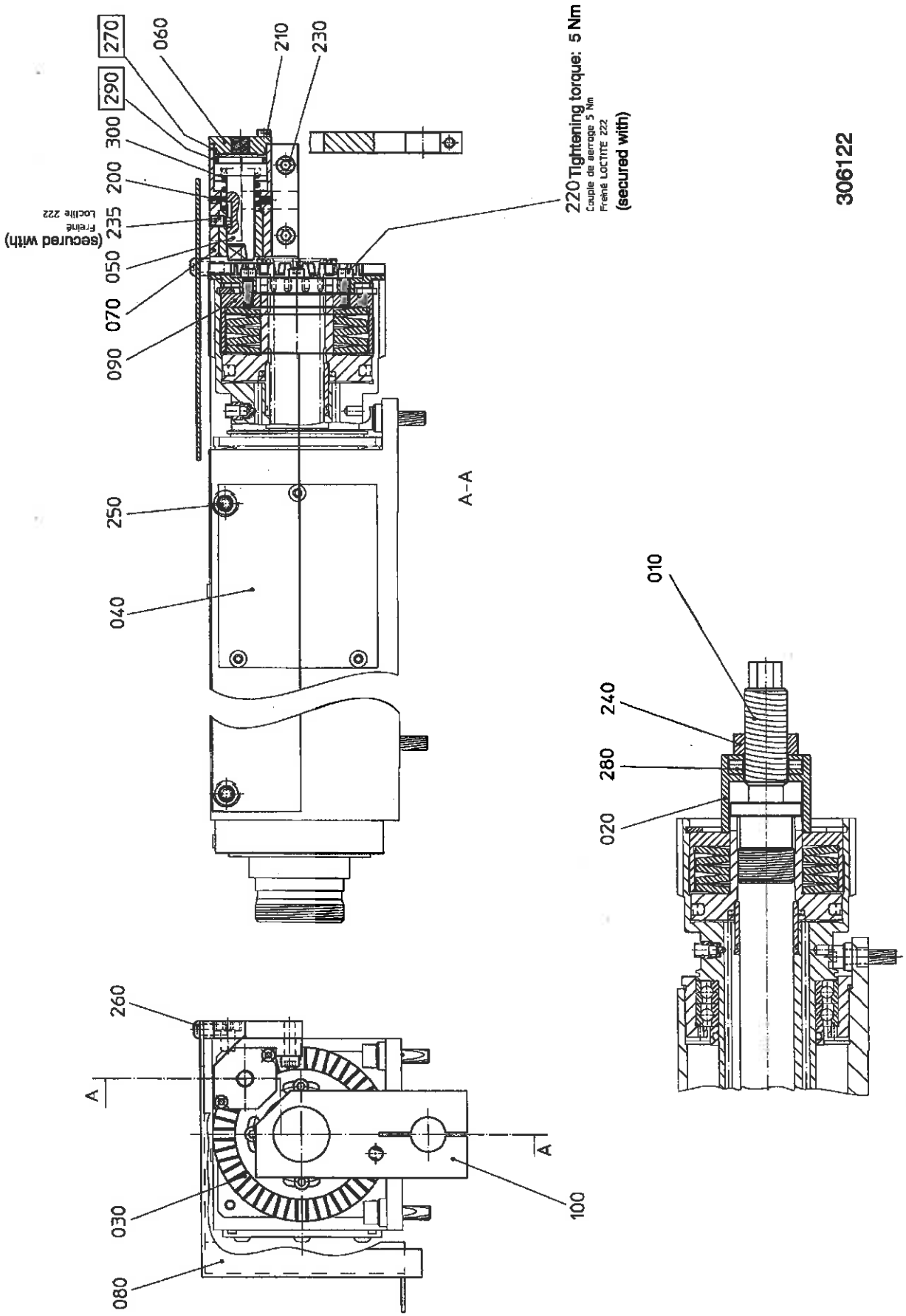

SPINDLE LOCKING OPERATION

- Spindle positioning : by NC (C-axis)
- Positioned-spindle locking : by an air-actuated locking pin which locks in the notched disk in the back of the spindle to fix the spindle position.
- Positioned-spindle unlocking : by Spring 290 which retracts locking pin.
- Standard notched disk : 24 x 15°-divisions
- Backlash : reduced to minimum due to slant of disk notches and locking pin

Note : The electric spindle control is off for unhindered locking / unlocking action.

▲ **Caution !**

- For correct operation of the system, follow strictly the instructions given in this chapter.
- Undo, reverse and fit Screwed Sealing Plug 200 in the topside bore whenever changing over from the main to pickoff spindle.

SPARE PARTS

Item		Designation	No.
270	215818	O-ring 26.70 x 1.78	1
290	217321	O-ring 23.47 x 2.62	1

DISMOUNT / MOUNT

DISMOUNTING / MOUNTING SPINDLE LOCKING SYSTEM	
What to do ?	How ? What for ? Notes
Dismounting • Take down Guard 080. • Remove Guiding-Tube Support 100. • Disconnect the air supply tube. • Unscrew two Screws 250. • Remove the locking mechanism. • Unscrew Screws 220. • Withdraw Notched Disk 030. • Remount Guard 080.	
Mounting • Replace Bushing 090 : • Fit Notched Disk 030 : • Fit Locking Mechanism : • Angular adjustment :	 for details, see opposite. for details, see opposite. for details, see opposite overleaf. for details, see opposite overleaf.

CHANGE

REPLACING REAR SPINDLE-SPRING BUSHING For Mounting Spindle Locking Mechanism	
• Use Assembly Tooling 010, 020, 240 and 280 included in the option.	
What to do ?	How ? What for ? Notes
• Take down the headstock guard.	
• Remove Barguide-Tube Support 100.	
• Screw in Rod 010 in the spindle.	
• Fit the assembly tooling :	i.e. Roller Bearing 280, Screwed Sleeve 020, Nut 240 on Rod 010.
• Keep screwing Sleeve 020 ...	... until it leans against Bushing 090.
• Tighten Nut 240 by approx. 0.5 mm ...	... to release the elastic SEEGER ring.
• Remove the elastic SEEGER ring.	
• Unscrew completely Nut 240.	
• Remove Bushing 090 without bores.	
• Fit Bushing 090 with bores.	
• Fit again the assembly tooling :	see above
• Retighten and fit in place the elastic SEEGER ring.	
• Take down the assembly tooling :	see above

MOUNT

FITTING NOTCHED DISK For Mounting Spindle Locking Mechanism	
What to do ?	How ? What for ? Notes
• Align the spindle key :	It is located forward in the headstock. Approximate alignment only.
• Fit Notched Disk 030 ...	... in the back of the spindle.
• Align the spindle key and the next notch	Approximate alignment only.
• Tighten Screws 220 ...	... with 5 Nm torque as indicated on the unit.

MOUNT

FITTING SPINDLE LOCKING MECHANISM	
What to do ?	How ? What for ? Notes
• Check if Screwed Sealing Plug 200 is well in the topside bore.	• Undo, reverse and fit Screwed Sealing Plug 200 in the topside bore whenever changing over from the main to pickoff spindle.
• Fix the locking mechanism to the headstock side with Screws 250.	
• Insert Screws 230 ...	... without tightening them.
• Connect the locking mechanism to the pneumatic unit.	See Para. LOCKING PNEUMATICS below.
• Make sure that Locking Pin 050 approximately faces a notch of the disk.	
• Activate Locking Pin 050 to lock :	over NC
• Tap on Cylinder 060 ...	... for snug locking.
• Tighten Screws 230.	
• Deactivate Locking Pin 050 to unlock :	over NC
• Fit in place Barguide-Tube Support 100.	

ADJUST

ANGULAR SETTING For Angularly Positioned Machining of Profiled Bars For profiled bars (square, hex), it may be necessary to orient the spindle key in relation to the disk notches.	
What to do ?	How ? What for ? Notes
• Take down Guard 080.	
• Fit a profiled collet and bar in the spindle and shift the bar ...	... up to the tool line.
• Close the collet.	
• Reduce the air pressure of the conditioning unit ...	... by approx. 3 bar.
• Position the spindle at required angle :	i.e. Locking Pin 050 to approximately face a notch of the disk.
• Activate Locking Pin 050 to lock :	over NC
• Loosen Screws 220.	
• Position the spindle at required angle :	i.e. now at exactly required angle
• Tighten Screws 220 ...	... with 5 Nm torque as indicated on the unit.
• Deactivate Locking Pin 050 to unlock :	over NC
• Reset the air pressure to its initial 6 bar.	
• Fit Guard 80 in place.	

2.4.2 (306125) Positioned-Spindle Locking Pneumatics

SPINDLE LOCKING PNEUMATICS APPLICATION

- On Machine 199223 **DECO 20**
  with Positioned-Spindle Locking System (306122)
- On Machine 199225 **DECO 26**
  with Positioned-Spindle Locking System (306139)

Components :

010 Air-flow regulator for unlocking

020 Electrovalve

050 Air-flow regulator for locking

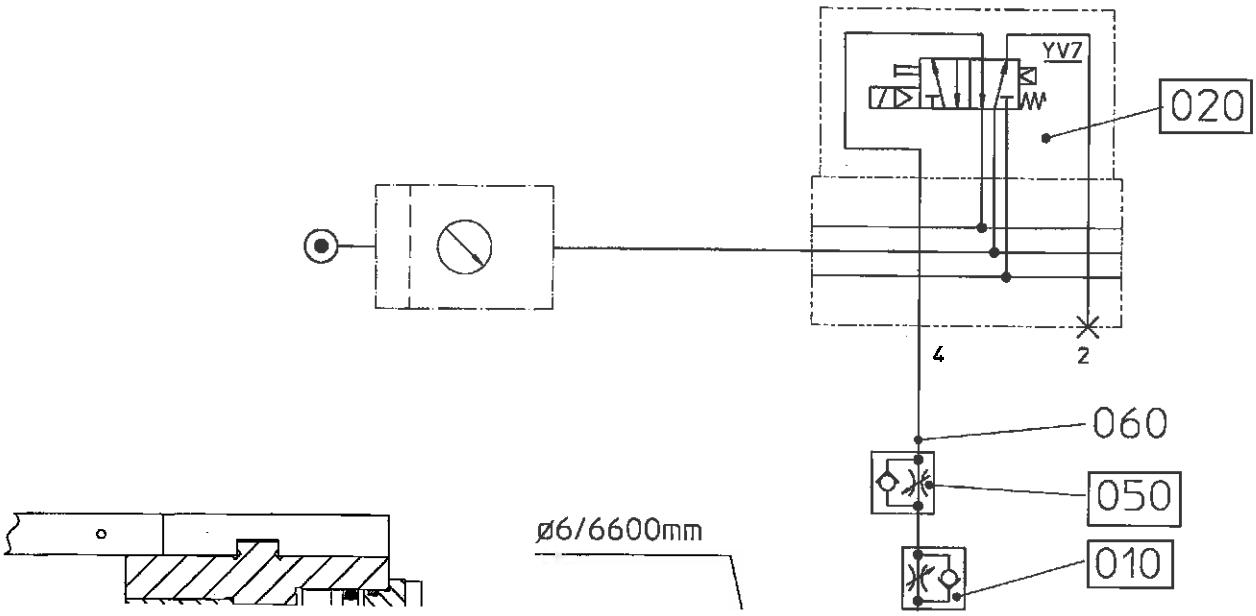

LOCKING PNEUMATICS OPERATION & LOCKING / UNLOCKING RATE ADJUSTMENT

- Electrovalve 020 : controls advance of locking pin
- Air-Flow Regulator 010 : reduces advance rate of locking pin
- Air-Flow Regulator 050 : reduces retract rate of locking pin

SPARE PARTS

Item		Designation	No.
010	208584	Air-Flow Regulator Festo GR-1/8	1
020	216509	Electrovalve 5/2 monostable 24 V BOSCH No. 0 820 038 052	1
050	216698	Air-flow regulator Festo GRLA 1/8 QS 6	2

TORNOS BECHLER

3. X1-X2 & X2-Y2 GANG OPTIONS

Some options presented in this chapter are used on the tool gangs other than X1-Y1 or X2-Y2.

The other gangs which can accommodate these options will be specified in the paragraphs below under the toolholder geometrics or as tool positions other than T11 to T15 or T21 to T25 (i.e. X1-Y1 or X2-Y2 gangs).

3.1 16x16mm-TOOLHOLDERS

3.1.1 (306033) Left / Right Toolholder

- On Machines: 199223 & 199225 DECO 20&26

- For details, see your Instructions: INSTALLATION - OPERATION - MAINTENANCE,

Para. 8.1	Instructions 300401	DECO 20
Para. 7.1.1	Instructions 300441	DECO 26

3.1.2 (306061) High Toolholder

- On Machines: 199223 & 199225 DECO 20&26

- For details, see your Instructions: INSTALLATION - OPERATION - MAINTENANCE,

for DECO 20:	Para. 8.2	Instructions 300401
for DECO 26:	Para. 7.1.2	Instructions 300441

3.2 2-POSITION FIXED TOOLHOLDERS

3.2.1 (306067) 2x16mm-ID Knee-Toolholder

- On Machines: 199223 & 199225 DECO 20&26

Components :

030	Spacing rod	110	Coolant plug
040	Spacing screw	130	Fastening screws
100	Spacing nut	140	Securing screws for spacing
		170	Tool clamping screws

DATA

2x16mm-ID KNEE-TOOLHOLDER DATA [mm]		
General :		
• Capacity :	ID	2 x 16 ∅ H6
Geometrics :		
• X1-Y1 & X2-Y2 gangs :	X1, X2	117.5
	Y1, Y2	+10 / -10
	Z1	0 to 50 infinitely variable
• Shaft :	front	127.5
	back	- 64.5

2x16mm-ID KNEE-TOOLHOLDER OPERATION

The bores allow for a modular customer-friendly application of standard and other tooling.

- Cutting oil supply : bore available for oil pipe
  Unscrew Plug 110 and fit an appropriate coolant conduit.
- Tool clamping : with four Clamping Screws 160
- Length setting : up to 40 mm with two screws
  (Loosen/tighten two Securing Screws 140)

⚠ Caution !

Application restrictions for 2x16 mm-ID Knee-Toolholder :

- Application possible but according to how Part Disposal Manipulator is adjusted for part removal from guidebush, conflicting geometrics can occur with the toolholder in T11 to T13.
  (More about the manipulator and Part Removal From Guidebush, see Para. 5.3 and 7.4 in your Instructions 300401 and 300441 for DECO 20 and 26 respectively)
- Machine with pickoff spindle:
  Application possible but not in T11, T12, T21 and T22.
  X4 > Y1, X4 > Y2 must be respected at all times.

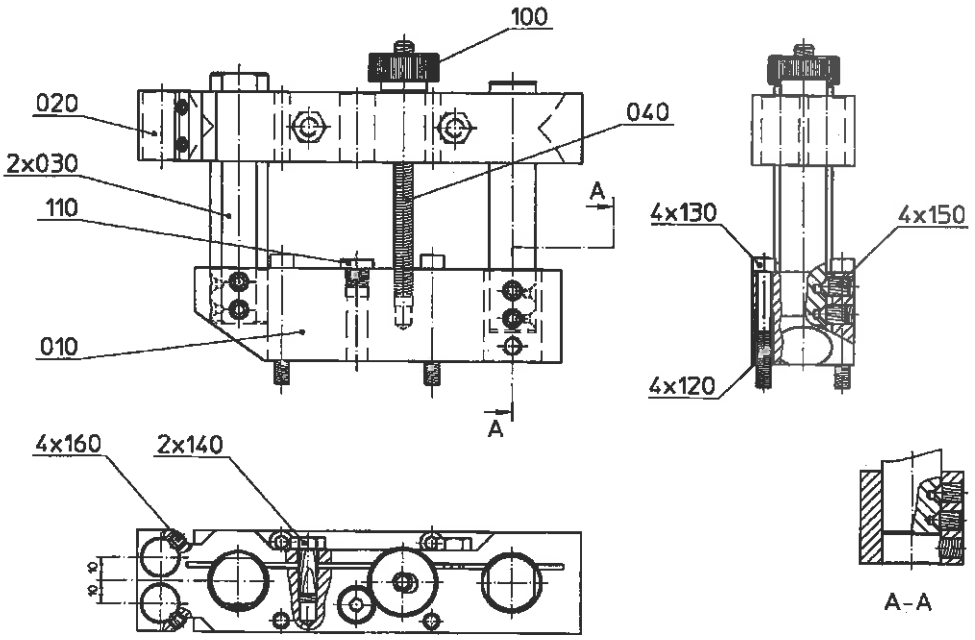
100
020
040
2x030
110
A
4x130
4x150
010
4x120
A
4x160
2x140
A-A

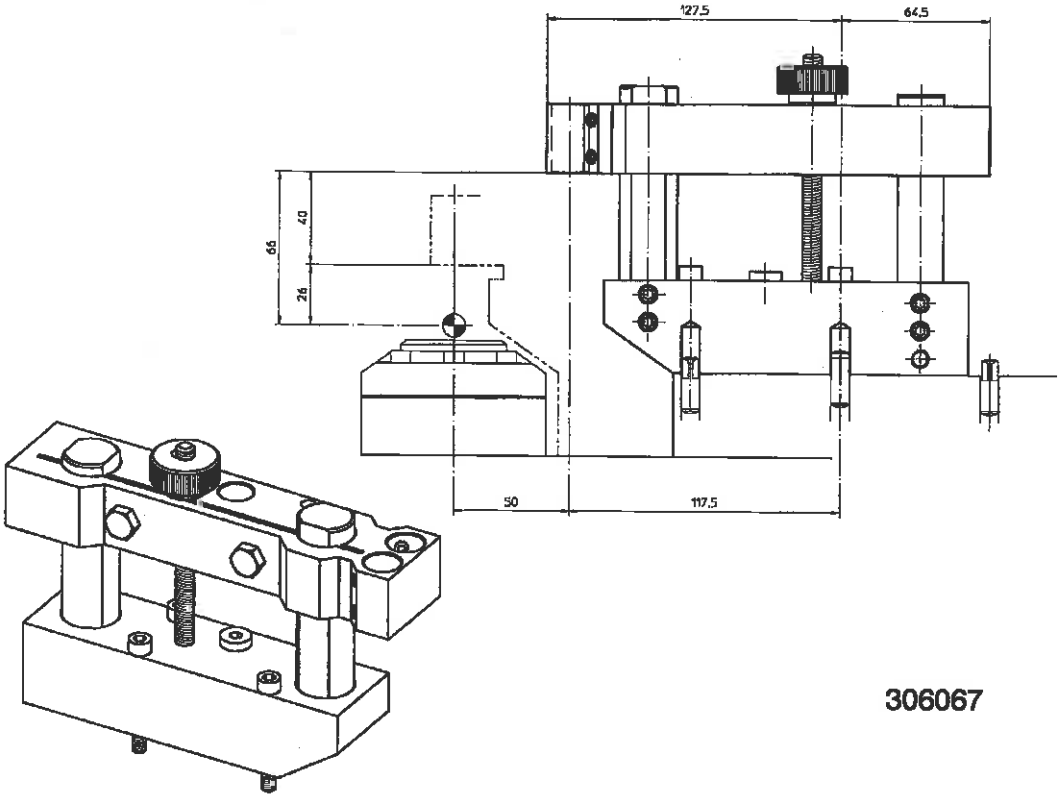
127,5
64,5
65
40
26
50
117,5
306067

CHANGE

2x16mm-ID KNEE-TOOLHOLDER CHANGE	
To start with : Set the machine in the reference position.	
What to do ?	How ? What for ? Notes
Dismounting • Unscrew four Fastening Screws 130. • Take down the toolholder. • Block the coolant outlet ...	... if required.
Mounting • Fit another toolholder ... • Screw in and tighten four Fastening Screws 130.	... set in place by the two locating pins.

⚠ **Caution !**

COLLET HOLDER EXTENSION for 2x16mm-ID KNEE-TOOLHOLDER

- If the extension head ∅ > 20 mm the tool line is exceeded and conflicting geometrics may occur.
- The extension head must be ⩽ 15 mm to respect the tool ratings such as setting range, maximum drilling depth, etc.

3.2.2 (306068) 25mm-ID Knee-Toolholder

- On Machine: 199223

DECO 20

Components : (see Fig. overleaf)

030 Spacing rod
040 Spacing screw
100 Spacing nut
110 Coolant plug
130 Fastening screws
140 Securing screws for spacing
160 Tool clamping screws

DESCRIPTION

25mm-ID KNEE-TOOLHOLDER MOUNTING POSITIONS

Machine Version	Modular Application	Mounting Positions	Positions preferred (in that order)
DECO 0001	yes	T11 to T15	
		T21 to T25	
DECO 0003	yes	T13 to T15	T15>T14>T13
		T23 to T25	T25>T24>T23

DATA

25mm-ID KNEE-TOOLHOLDER DATA
[mm]

General :

- Capacity : ID 25 ∅ H7

Geometrics :

- X1-Y1 & X2-Y2 gangs : X1, X2 127.5
  Y1, Y2 0
  Z1 0 to 100 infinitely variable
- Shaft : front 145.5
  back - 64.5

TORNOS BECHLER

25mm-ID TOOLHOLDER

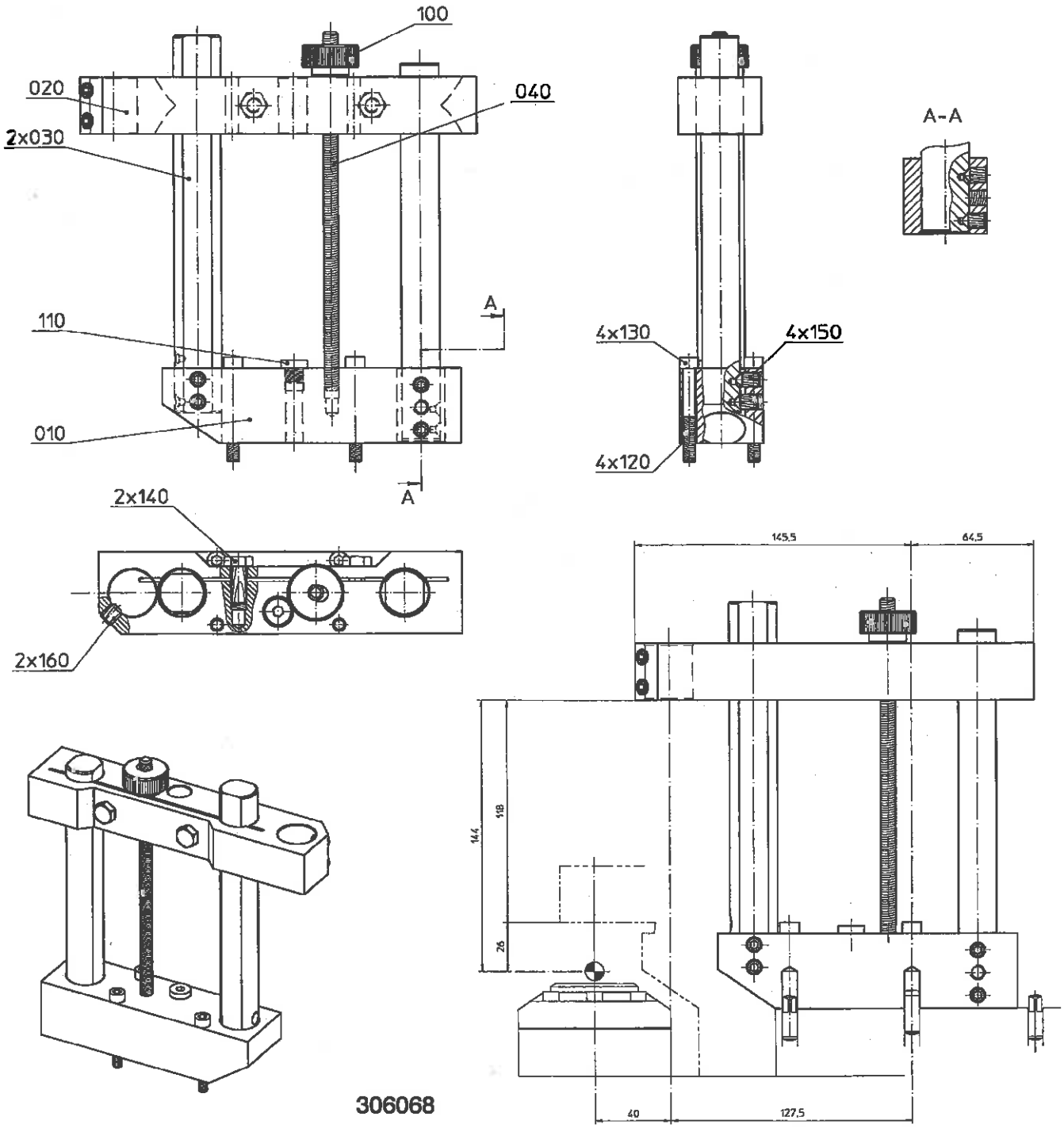

306068

25mm-ID KNEE-TOOLHOLDER OPERATION

The bore allows for a modular customer-friendly application of standard and other tooling.

- Cutting oil supply : bore available for oil pipe
  Unscrew Plug 110 and fit an appropriate coolant conduit.
- Tool clamping : with two Clamping Screws 160
- Length setting : up to 120 mm
  (Loosen/tighten two Securing Screws 140)

▲ Caution !

Application restrictions for 25 mm-Bore Knee-Toolholder :

The 25mm-ID knee-toolholder protrudes beyond the tool line and can preclude the simultaneous use of the two tool systems if used on both.

- Machine with Frontwork Unit:
  Application absolutely impossible because of unavoidable conflicting geometrics.
- Machine with pickoff spindle:
  Application possible but Part Disposal Manipulator cannot be used with the toolholder in T11, T12, T13, T21 and T22, i.e. the manipulator cannot remove parts from the pickoff spindle.
  (More about the manipulator and Part Removal From Pickoff Spindle, see Para. 5.3 in your Instructions 300401)

CHANGE

25mm-ID KNEE-TOOLHOLDER CHANGE **To start with :** Set the machine in the reference position.	
What to do ?	How ? What for ? Notes
Dismounting • Unscrew four Fastening Screws 130. • Take down the toolholder. • Block the coolant outlet ...	... if required.
Mounting • Fit another toolholder ... • Screw in and tighten four Fastening Screws 130.	... set in place by the two locating pins.

▲ Caution !

COLLET HOLDER EXTENSION for 25mm-ID KNEE-TOOLHOLDER

The extension head length must be ≤ 40 mm to respect the tool ratings such as setting range, maximum drilling depth, etc.

TORNOS BECHLER

3.3 LIVE UNITS FOR ESX 25-COLLET

3.3.1 (306038) Drilling Spindle For ESX 25-Collet

- On Machines: 199223 & 199225

DECO 20&26

Components :

020 Spindle
030 Toothed wheel
100 Spindle locking screw
110 Fastening screw
115 Screwed sealing plug for compressed-air hole
160 Collet nut (EX25 M M30x1)
170 Coolant spout
1010 Flats
1020 Compressed-air hole

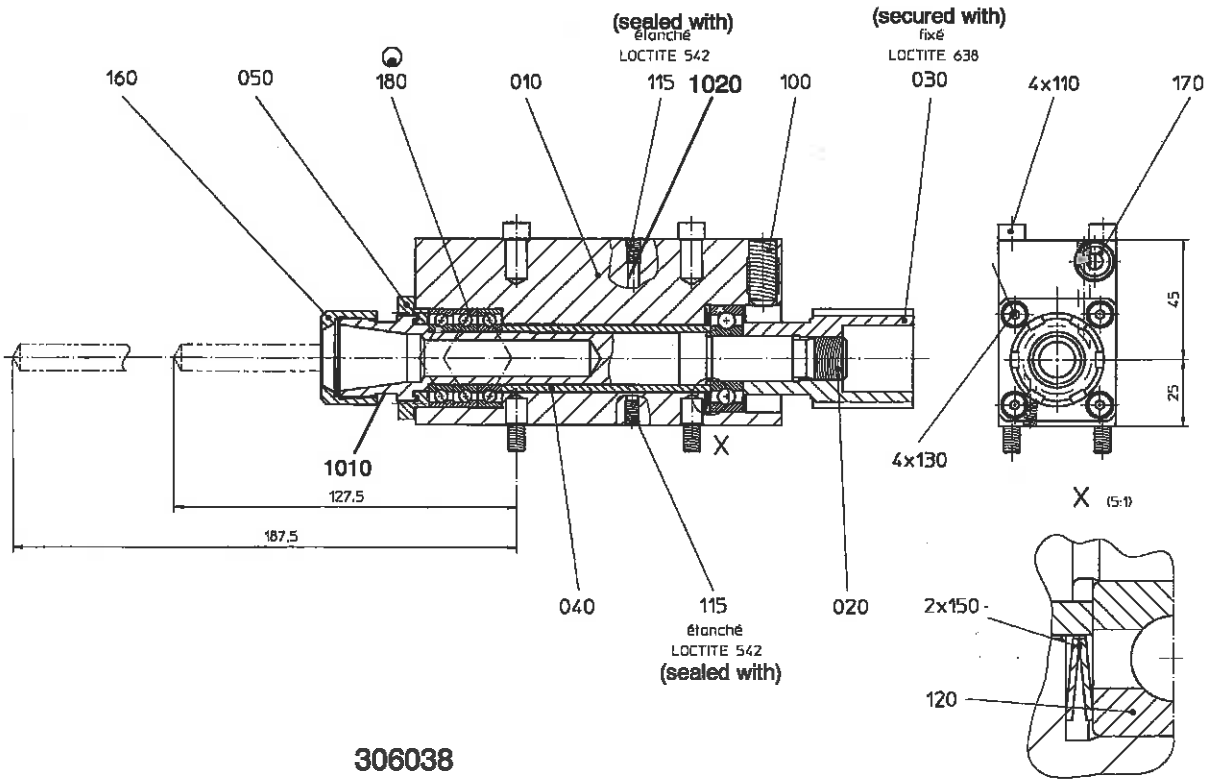

306038

DESCRIPTION

MOUNTING POSITIONS FOR ESX 25 DRILLING SPINDLE

Location	Modularity	No. tools	Mounting Positions	Notes
X2-Y2 gang :	yes	1 to 4	T22 to T25	
Frontwork gang :	yes	1 to 4	T31 to T34	
Axial backwork gang :	yes	1 to 4	T41 to T44	with spindle locked
Cross backwork gang :	yes	1 to 3	T51 to T53	

DATA

ESX 25 DRILLING SPINDLE DATA
[mm]

General :

• Capacity :	ESX 25 collet : ET 25 collet : Slitting saw Ø, max.:	1 - 16 M3.5 - M10 (M12) 50
• 2-position height setting :	max.:	20
• Speed :	max.:	8000 rpm

Geometrics :

• X2-Y2 gang :	X2 Y2 Z1	127.5 0 25 or 45
• Frontwork gang :	X3 (Y3) Z3	0 25 187.5
• Cross backwork gang :	X4 Y4 Z4	127.5 0 25 or 45

ESX 25 DRILLING SPINDLE OPERATION

• Toolholding spindle support :	preloaded ball bearings in the front, on a deep groove ball bearing in the back
• Spindle bearing greasing :	The bearings are pregreased for life.
• Bearing protection :	by compressed air (e.g. from emulsions)
• Spindle drive :	over a toothed wheel, screwed and secured at the rear end of the spindle
• Spindle locking :	by clamping Screw 100
• Cutting oil supply :	from its own spout
• ESX collet nut removal :	by holding the spindle over Flats 1010
• 20 mm 2-pos. height setting :	by upside-down reversal

CHANGE

ESX 25 DRILLING SPINDLE TOOLHOLDER CHANGE

To start with : Loosen or remove the drive belt.

See also : S2 Drive (306035), see Para. 3.8.6
in your Instructions 300401 for DECO 20
in your Instructions 300441 Index for DECO 26

S3 Drive (306011), Para. 4.3.1.

S5 Drive (306036), Para. 5.4.1 (cross).

S5 Drive (306099), Para. 5.5.1 (axial).

What to do ?	How ? What for ? Notes
Dismounting	
• Disconnect the compressed-air pipe ...	... if required.
• Unscrew the four fastening screws.	
• Take down the toolholder.	
• Block the cutting oil spout ...	... if required.
Mounting	
• Make sure that Screws 100 and 115 do not jut out of the bearing face ...	... to assure snug fit of the toolholder.
• Fit another toolholder ...	... set in place by the two locating pins.
• Screw in and tighten the four fastening screws.	
• Connect the compressed-air pipe to Compressed-Air Hole 1020.	• Unless the option is available, block both M5x6 Holes 1020.
• Fit in and tension the drive belt.	

TORNOS BECHLER

3.3.2 (306086) 63mm-OD Milling Spindle For ESX 25-Collet

- On Machines: 199223 & 199225

DECO 20&26

Components :

020 Spindle
030 Toothed wheel
100 Spindle locking screw
110 Fastening screw
160 Collet nut : EX25 M M30x1
170 Coolant spout
1010 Flats
1020 Compressed-air hole

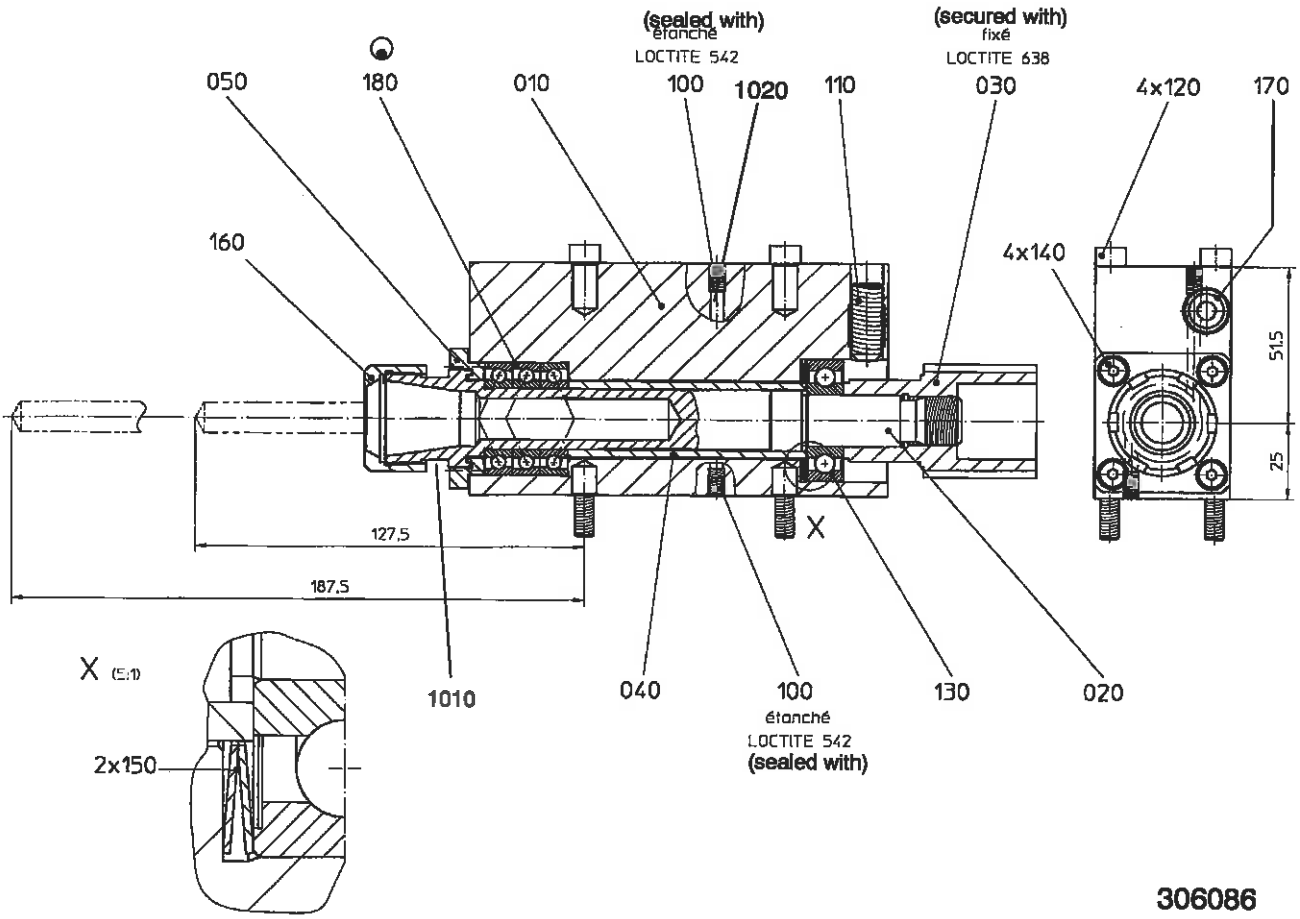

DESCRIPTION

MOUNTING POSITIONS FOR ESX 25 MILLING SPINDLE

Location	Modularity	No. tools	Mounting Positions	Incompatibility
X2-Y2 gang :	yes	1 to 4	T22 to T25	no
Frontwork gang :	yes	1 to 4	T31 to T34	no
Axial backwork gang :	no	0	none	with guards
Cross backwork gang :	no	0	none	possible with pickoff spindle

DATA

ESX 25 MILLING SPINDLE DATA
[mm]

General :

• Capacity :	ESX 25 collet :	1 – 16
	ET 25 collet :	M3.5 – M10 (M12)
	Slitting saw ∅, max.:	63
• 2-position height setting :	max.:	26.5
• Speed :	max.:	8000 rpm

Geometrics :

• X2-Y2 gang :	X2	127.5
	Y2	0
	Z1	25 OR 51.5
• Frontwork gang :	X3	0
	(Y3)	25
	Z3	187.5

ESX 25 MILLING SPINDLE OPERATION

• Toolholding spindle support :	preloaded ball bearings in the front, on a deep groove ball bearing in the back
• Spindle bearing greasing :	The bearings are pregreased for life.
• Bearing protection :	by compressed air (e.g. from emulsions)
• Spindle drive :	over a toothed wheel, screwed and secured at the rear end of the spindle
• Spindle locking :	by clamping Screw 100
• Cutting oil supply :	from its own spout
• ESX collet nut removal :	by holding the spindle over Flats 1010
• 26.5 mm 2-pos. height setting :	by upside-down reversal

CHANGE

CHANGING ESX 25 MILLING SPINDLE TOOLHOLDER

To start with : Loosen or remove the drive belt.

See also : S2 Drive (306035), see Para. 3.8.6
in your Instructions 300401 for DECO 20;
in your Instructions 300441 Index for DECO 26

S3 Drive (306011), Para. 4.3.1.

What to do ?	How ? What for ? Notes
Dismounting	
• Disconnect the compressed-air pipe ...	... if required.
• Unscrew the four fastening screws.	
• Take down the toolholder.	
• Block the cutting oil spout ...	... if required.
Mounting	
• Make sure that Screws 100 and 110 do not jut out of the bearing face ...	... to assure snug fit of the toolholder.
• Fit another toolholder ...	... set in place by the two locating pins.
• Screw in and tighten the four fastening screws.	
• Connect the compressed-air pipe to Compressed-Air Hole 1020.	• Unless the option is available, block both M5x6 Holes 1020.
• Fit in and tension the drive belt.	

3.4 RADIAL POLYGONING

3.4.1 (306071) Polygoning Unit

- On Machines: 199223 & 199225 DECO 20&26

Components :

010 Cutter fastening screw
020 Driving pinion
310 Fastening screw

POLYGONING UNIT DATA

⚠ **Caution !**
With the polygoning unit in T25, cut at an angle of 26.56° in X and Y-axes. Here, for a live tool you need a single tool station only to cut in X2 and Y2 with the big 80mm-∅ cutter.

		Notes :
• Mounting positions :	T22, T23 and T24 :	◇ two positions required ◇ machining in X possible
	T25	preferable ◇ just a single position required
• Cutting angle in T25 :	26.56°	Y2 / X2 = 1/2
• Milling cutter OD :	80 mm	
ID :	16 mm H6	
• Cutter speed, max.:	8000 rpm	
• Transmission ratio :	1 : 1	

POLYGONING UNIT DESCRIPTION

- Toolholder support : preloaded ball bearings
- Bearing greasing : pregreased for life
- Transmission : a pair of bevel gears and a timing belt without backlash

⚠ **Caution !**
The attachment is designed for revolution counter-clockwise.
Choose M204 for engagement in S2 spindle speed (counter-clockwise revolution)

SPARE PARTS

Item		Designation	No.
350	203753	Grooved ball bearing 6003-2Z	2
360	204917	Needle bush HK 1010	1
430	217105	Angular contact bearing 7003-E-A-L-2Q	3
460	217211	Synchroflex belt 25/T5/225	1

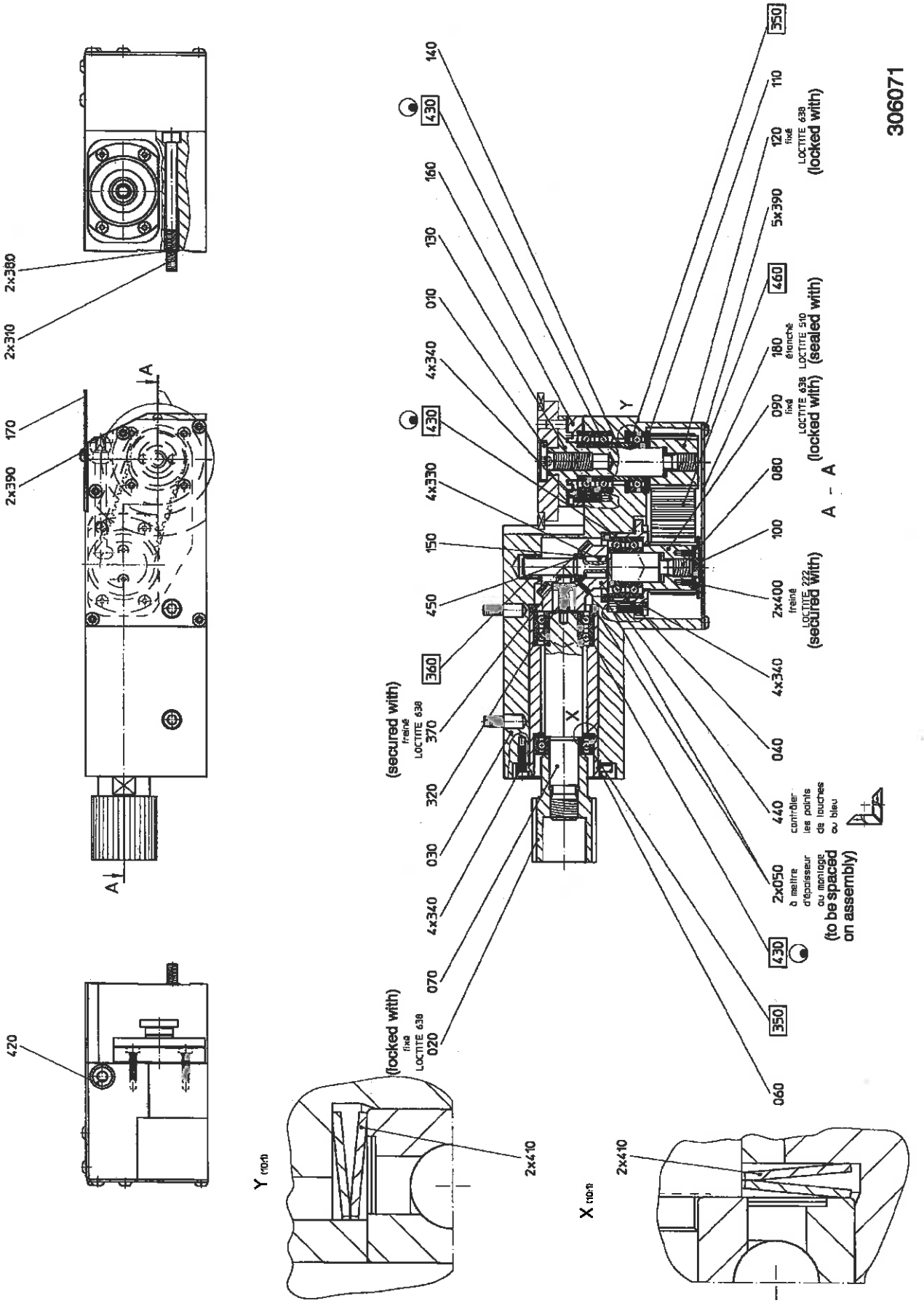
306071
A - A
140
430
160
130
010
4x340
430
4x330
150
450
360
370
320
030
4x340
070
020
(locked with)
fixé
LOCTITE 638
(secured with)
frainé
LOCTITE 638
2x380
2x310
170
2x390
420
A
A
Y (10:1)
2x410
X (10:1)
2x410
350
110
120
fixé
LOCTITE 638
(locked with)
5x390
460
180
étanché
LOCTITE 510
(sealed with)
090
fixé
LOCTITE 638
(locked with)
080
100
2x400
frainé
LOCTITE 222
(secured with)
4x340
040
440
contrôler les points de touches au bleu
2x050
à mettre d'épaisseur au montage
(to be spaced on assembly)
430
350
060

CHANGE

CHANGING POLYGONING CUTTER	
To start with : Put the machine in SETTING mode. Set the X2-Y2 gang in its reference position.	
What to do ?	How ? What for ? Notes
Dismounting	
• Insert a 6mm-∅ pin into the off-center-located hole in the cutter to lock its rotation :	Turn the arbor by hand until you see the hole if necessary. See Fig. opposite.
• Undo Fastening Screw 010 ...	... with Allen key: s = 5 mm
• Remove the cutter.	
Mounting	
• Fit another cutter on the arbor ...	... aligning it properly with the driving pinion.
• Insert Fastening Screw 010.	
• Insert the 6mm-∅ pin into the off-center-located hole in the cutter to lock its rotation :	Turn the arbor by hand until you see the hole if necessary. See Fig. opposite.
• Tighten Fastening Screw 010 ...	... with Allen key: s = 5 mm

GREASE

GREASING BEVEL GEARS of Polygoning Unit	
Maintenance Interval : Grease bevel gears annually or at least every 3000 hours' operation.	
What to do ?	How ? What for ? Notes
Dismounting	
• Undo and remove four Screws 340.	
• Take down Bearing 030.	• Do not lose Rings 050.
Greasing	
• Proceed to grease the bevel gears.	For details, see your Instructions : • 300401, Para. 2.2.2 for DECO 20 • 300441, Para. 2.5.5 for DECO 26
Mounting	
• Fit Bearing 030.	• Make sure to fit Rigns 050.
• Screw in and tighten four Screws 340.	

TORNOS BECHLER

Polygoning Unit Rapid Traverse

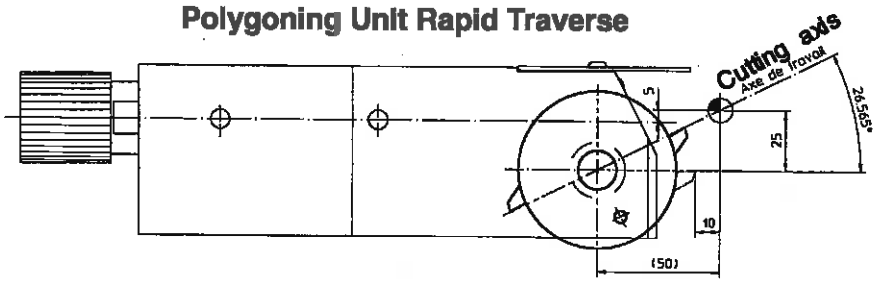

Standard Geometry

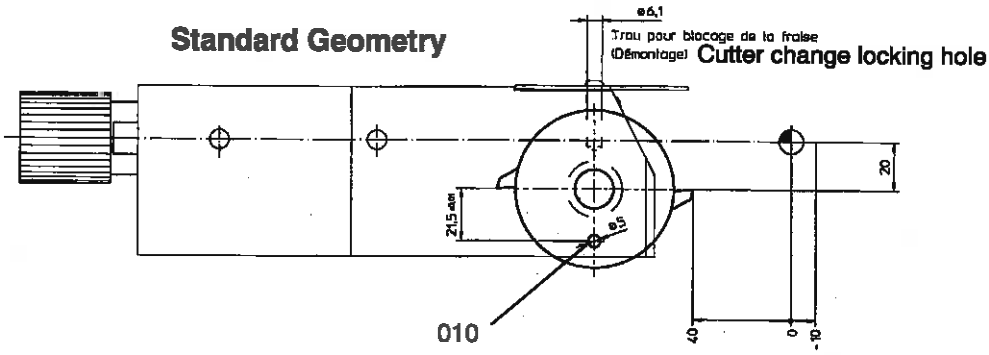

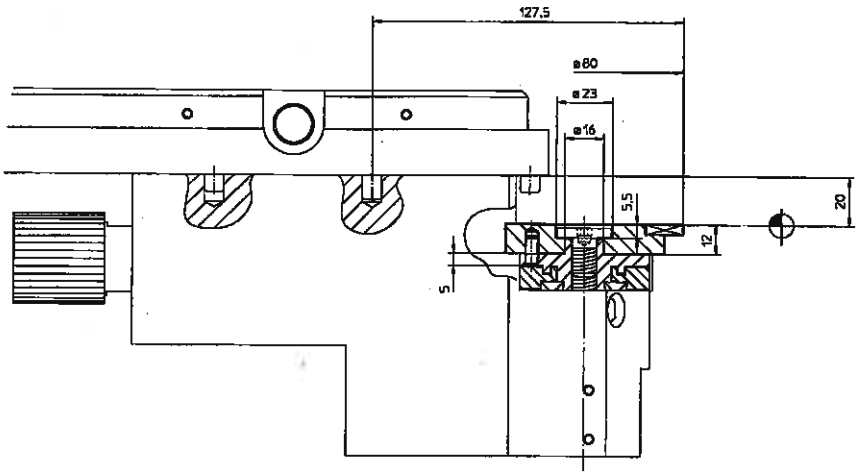

3.5 GENERATING

3.5.1 (306083) Generating Milling Unit

- On Machines: 199223 & 199225

DECO 20&26

Components :

010 Toothed wheel
040 Pivoted gear casing
060 Sleeve
070 Casing
090 Steady
330.1 Cutter fixing screws
330.2 Sleeve fixing screws
340 Steady fastening screws
350 Gear casing locking screws
360 Fastening screws
365 Angular setting screw

⚠ **Caution !**

Application restrictions for Generating Milling Unit :

- The generating unit can be mounted in T25 only and precludes modular application in T24 of any other tooling with the exception of ESX 25 Drilling Spindle (306038).

  The use of this drilling spindle restricts however the angular setting of the generating unit to 5° and less.
- The unit occupies more than one tool positron.
- The unit has no coolant nozzle.
- The unit must not revolve without a cutter as this may send the driving key flying.

- See also your Instructions 300195:
  DIRECTIONS FOR USE OF WATER-MISCIBLE CUTTING FLUIDS

TORNOS BECHLER

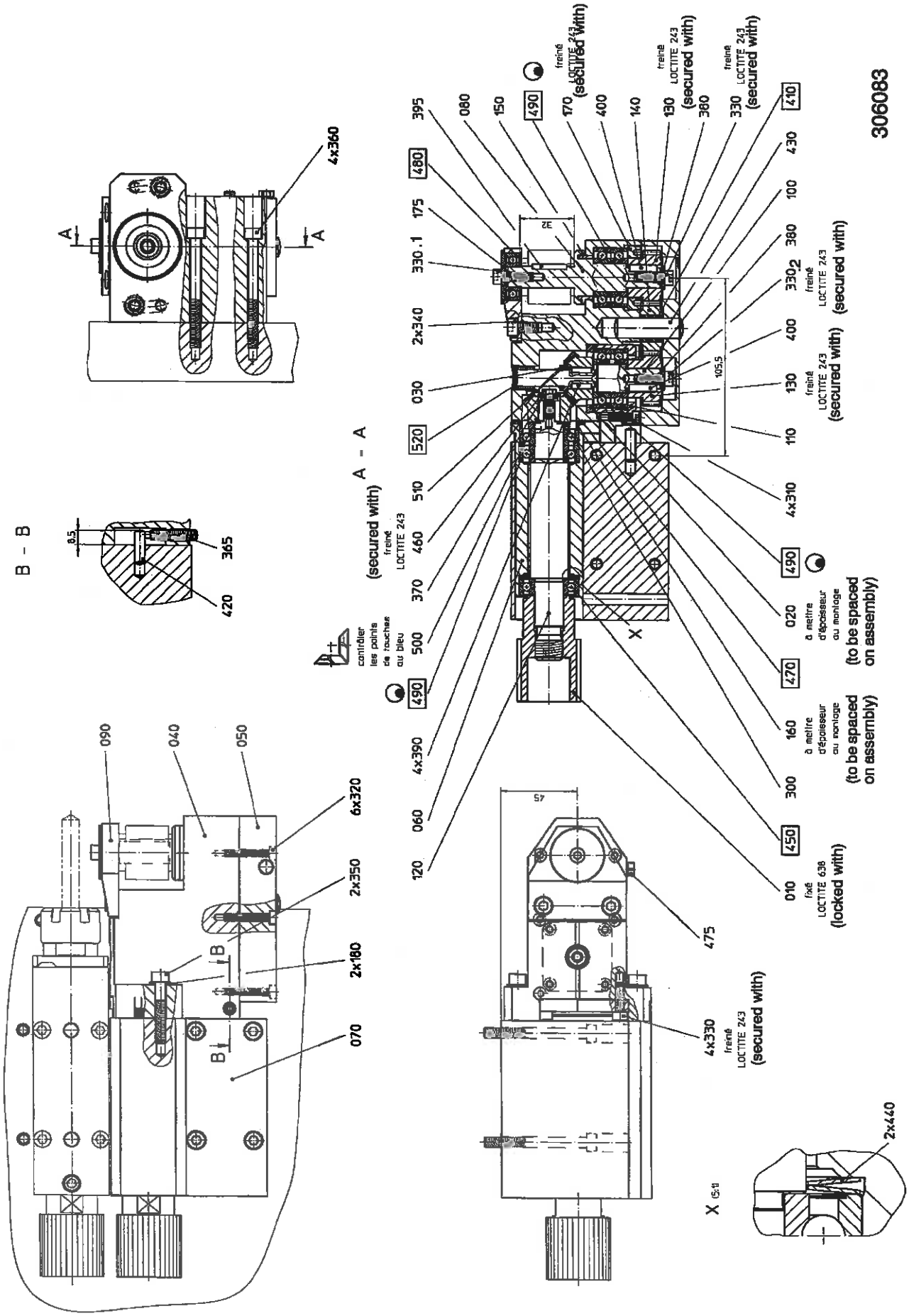

DATA

GENERATING MILLING UNIT DATA		
General :		
• Application :	cutting longitudinal profiles	
• Angular setting :	with drilling spindle in T24 :	± 5°
	without drilling spindle in T24:	± 10°
• Cutter speed :	maximum :	8000 rpm
	optimum :	500 to 4000 rpm
• Torque :	transmissible :	7 Nm
Tooling :		
• Cutter :	ID	13 mm
	OD max.:	32 mm
	Total length :	25 mm
	Key :	DIN 138 3x3 mm section
• Spacer rings :		DIN 2084 B, ID/OD: 13/22 mm
• Stack height :	i.e. cutter + spacer rings	32 mm (e.g. 25+2+5)
Geometrics :		
• Cutter axis :	X2	105.5 mm
• Space factor in T25 :	X2	127.5 mm

GENERATING MILLING UNIT OPERATION

• Cutting type :	continuous cutting by master cutter
• Application :	production of very long splined shafts and gears of very diversified profiles
• S1 / S2 speed ratio :	i.e. of S1-spindle and S2-cutter speeds : equal to the number of female splines to cut, the cutter speed being lower.
• Angular setting :	as required for correct splining
Angle for straight splines :	as cutter helix angle
• Bearing protection :	by compressed air (e.g. from emulsions)
	Before using compressed air, transfer Plug 475 into a threaded hole in Cover 050 (a leakage drain hole in a standard machine version).

ADJUST

ANGULAR SETTING OF GENERATING MILLING UNIT	
To start with : Calculate *Unit Inclination Angle = Cutter Helix Angle + Angle on Part*	
What to do ?	How ? What for ? Notes
Setting	
• Loosen two Locking Screws 350 ...	... of Gear Casing 040.
• Turn in / out Setting Screw 365 ...	... as required.
• Tighten two Locking Screws 350 ...	... of Gear Casing 040.

GREASE

GREASING BEVEL GEARS of Generating Milling Unit	
Maintenance Interval :	Grease bevel gears annually or at least every 3000 hours' operation.
What to do ?	How ? What for ? Notes
Dismounting	
• Take off two Screws 350.	
• Take down Casing 070.	
• Take off four Fixing Screws 330.2 ...	... Sleeve 060.
• Take down Sleeve 060 :	• Do not lose Seal 470, Rings 160 & 300.
Greasing	
• Proceed to grease the bevel gears.	For details, see your Instructions : • 300401, Para. 2.2.2 for DECO 20 • 300441, Para. 2.5.5 for DECO 26
Mounting	Reverse the dismounting steps above.

SPARE PARTS

Item		Designation	No.
410	209697	Needle cage K 12x16x13 TN 0/-2	1
450	212394	Grooved ball bearing 6003-2RZ	1
470	214897	O-Ring Viton 37.77x2.62	1
480	216954	Grooved ball bearing 6001-2RZ	1
490	217105	Angular contact bearing 7003-E-A-L-2Q	3
520	217217	Needle bush BK 1012	1

TORNOS BECHLER

3.6 THREAD WHIRLING

3.6.1 (306101) Thread Whirling

- On Machines: 199223 & 199225

DECO 20&26

Components :

040 Baseplate
050 Positionable gearbox
080 Toolholder flange
150 Closing plate
450 Gearbox screw
1010 Presettable cutter holder

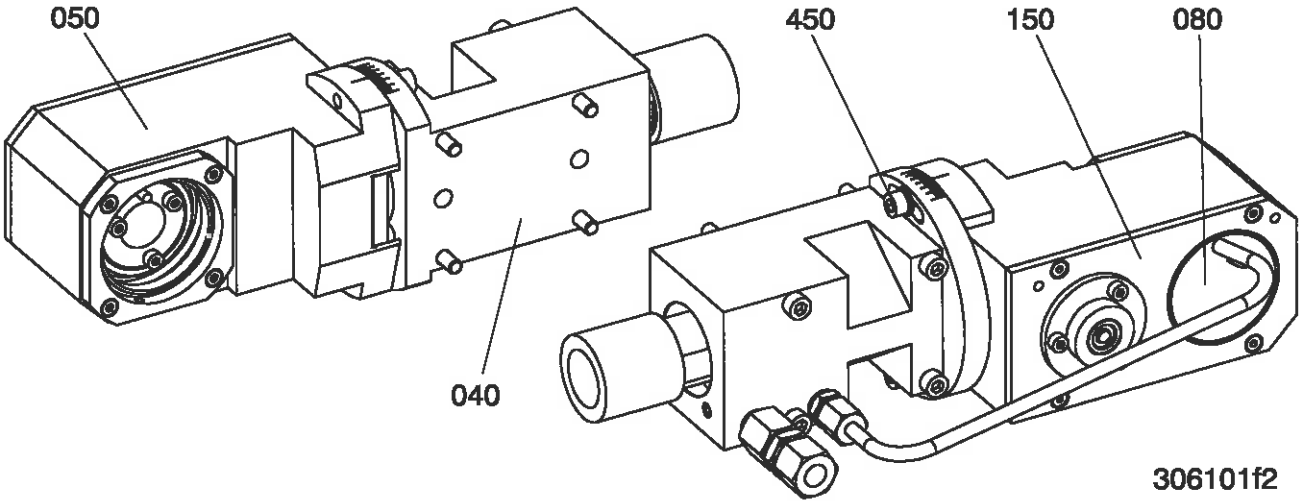

▲ **Caution !**
This attachment:
- occupies several tool positions.
- is not designed to operate with water-miscible cutting liquids (emulsions).

TORNOS BECHLER

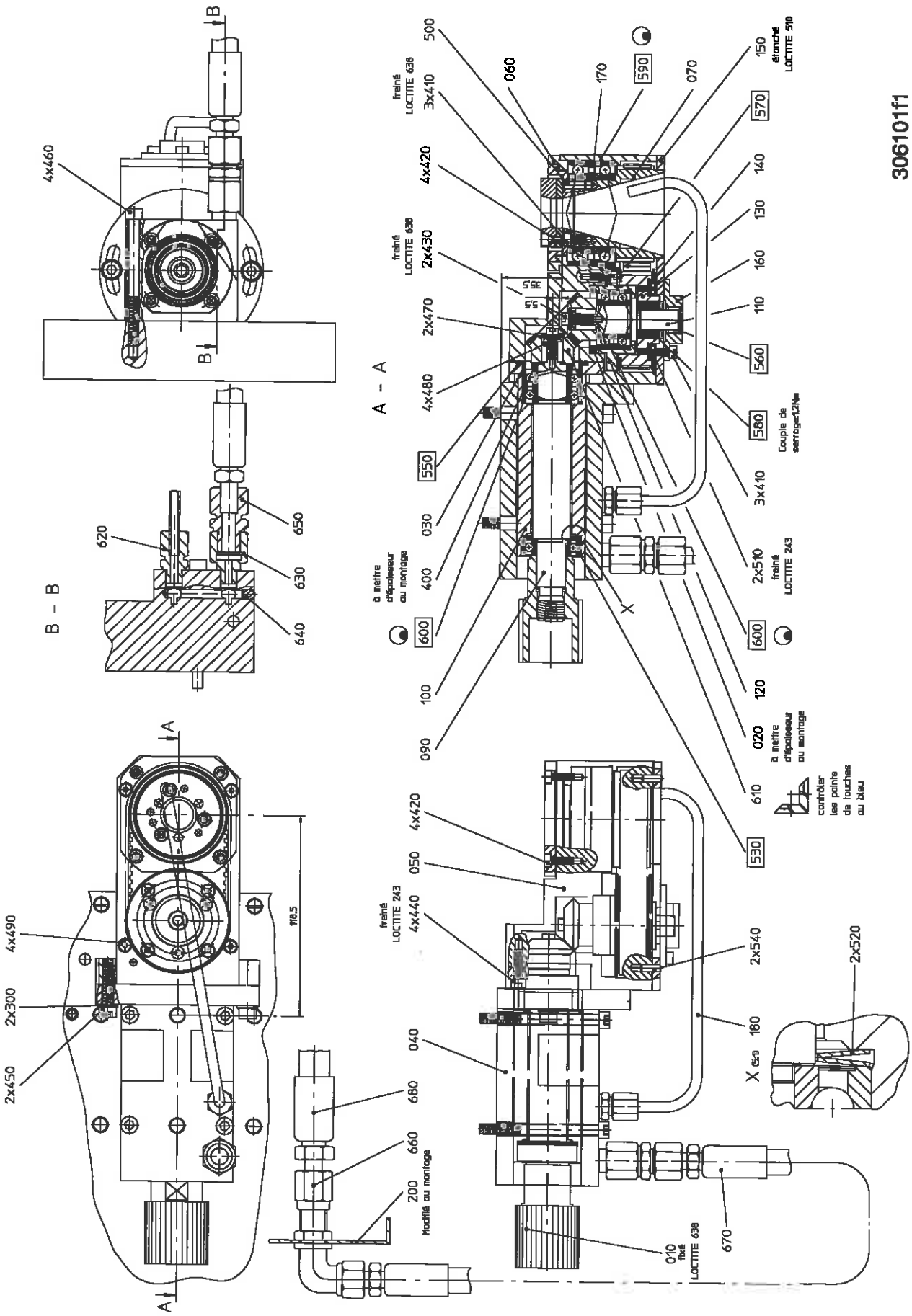

The attachment occupies positions T24 and T25.

The space requirement of this tool exceeds the tool line, it can suppress the possibility of simultaneous operation :

- of the two tool systems of the vertical.
- of backwork gang with X2 / Y2.

The tools T33 and T34 can "drill" the attachment when using the tools T31 and T32

Anti-collision coding	
Normally :See: Travel limitations	For the thread whirler:
X1 + X2 > 0	X1 + X2 > 25
If X2 < 25 then Z3 < -150	If X2 < 40 then Z3 < -100 (Max. tool ∅ on frontwork gang : 30 mm)

TECHNICAL DATA

Bar capacity	10 mm (independant from angle)	
Angular setting	± 15°	
Speed	max. :	8000 rpm
Transmissible torque:	Belt:	5,63 Nm at 8000 rpm 6,30 Nm at 4000 rpm

Tools		
Presettable cutter holder	472088	13 mm
Geometry	X2 milling cutter axis X2 space requirement	118,5 153

Operation

The toolholder axis, mounted on preloaded ball bearings, is inclinable to avoid bottoming when threading.

The transmission is assured by the intermediary of a couple of bevel gears and a timing belt without backlash

The ball bearings are lifetime-lubricated

The settable cutter holder is adapted on the toolholder flange

SETTING OF THE INCLINATION

Operation	Remarks
CALCULATION OF THE ANGLE	
angle = atan (lead / (PI x Diameter))	Example: Screw 6 mm lead of 1 mm angle = atan (1 / (3.14 x 6)) = 3,04°
SETTING Loosen the two screws of gearbox 450 Set inclination Screw and tighten the two screws of gearbox 450.	see graduation between gearbox and its baseplate.

LUBRICATION OF THE PAIR OF BEVEL GEARS

MAINTENANCE INTERVAL : Yearly but at least every 3000 hours

Operation	Remarks
DISMOUNTING Lay down closing plate 150 fixed by the 4 screws 490. Lay down flange 140, then the belt Lay down clamping sleeve 580 and pinion 130. Lay down the four screws 420 of the box. Lay down box 120.	2 screws 510
LUBRICATION Lubricate the pair of bevel gears	See : Lubrication of a pinion
MOUNTING Mount box 120 Mount and tighten the 4 screws 420 fastening the box 120. Mount clamping sleeve 580 and the pinion 130. Mount the belt, then flange 140 Mount the closing plate 150, fasten with the four screws 490.	Clamping torque 1,2 Nm 2 screws 510

SPARE PARTS			
Item		Designation	No.
530	212394	Grooved ball bearing 6003-2RZ	1
550	214897	O-Ring Viton 37.77x2.62	1
560	215014	Needle bush BK 1210	1
570	216431	Belt Syncroflex 16/T5/305	1
580	216753	Clamping sleeve DKWN 12x22x13	1
590	216774	Angular contact bearing 71908-C-A-32-2Q	1
600	217105	Angular contact bearing 7003-E-A-L-2Q	2

TORNOS BECHLER

3.7 VERY HIGH-FREQUENCY DRILLING AND MILLING (40000 RPM)

3.7.1 (306066) 30mm-ID Toolholder

- On Machines: 199223 & 199225 DECO 20&26

Components :

010 Toolholder
100 Fastening screws
110 Tool clamping screw
120 Coolant spout
1010 Multi-purpose bore M10x1

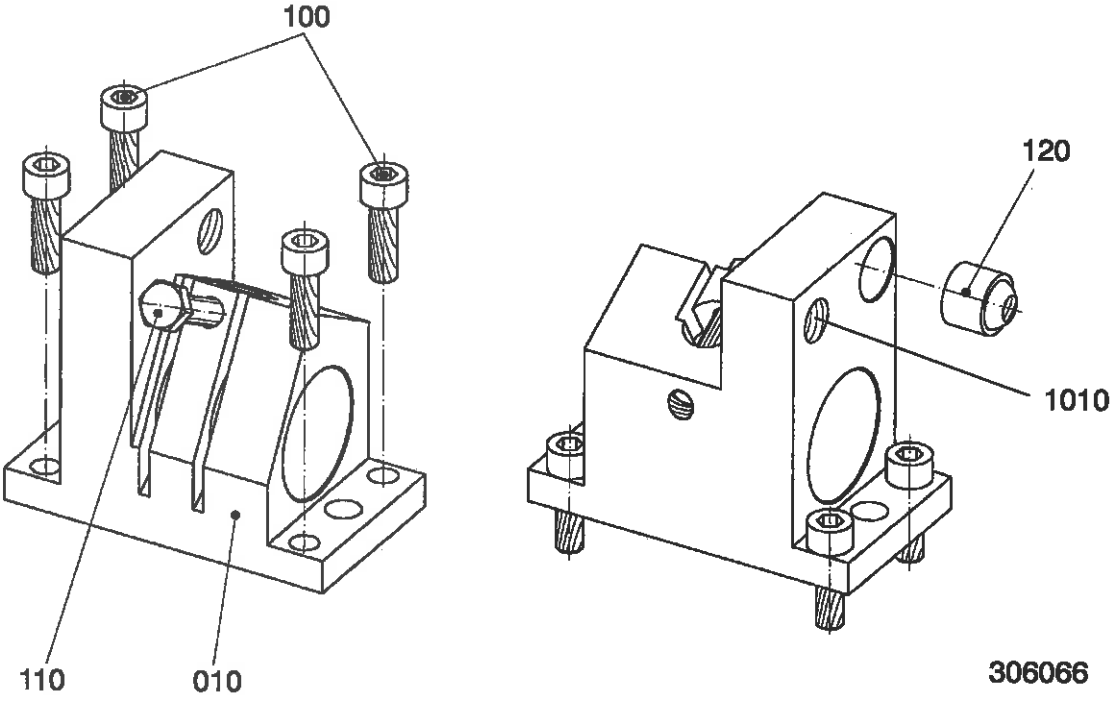

DESCRIPTION

MOUNTING POSITIONS FOR 30mm-ID TOOLHOLDERS			
Location	**Modularity**	**No. toolholders**	**Mounting Positions**
X1-Y1 & X2-Y2 gangs :	yes yes	1 to 5 1 to 5	T11 to T15 T22 to T25
Frontwork gang :	yes	1 to 4	T31 to T34
Axial backwork gang :	yes	1 to 4	T41 to T44
Cross backwork gang :	yes	1 to 3	T51 to T53

30mm-ID TOOLHOLDER DESCRIPTION

- Capacity (bore) : 30mm-∅ 30 H7
- Cutting oil supply : from its own spout
- M10x1 bore : available for other coolant systems
- Tool holding : by split clamping
  which prevents local pressures
  and allows for fitting live-tool spindles

Note : Fit the toolholder forward on the baseplate to make full use of spouting coolant.

▲ **Caution !**

A tool must not protrude at the back of 30mm-ID Toolholder (306066) as this may cause conflicting geometrics with the protective shutters of the live-tool spindle drives.

CHANGE

30mm-ID TOOLHOLDER CHANGE	
To start with : Set the machine in the reference position.	
What to do ?	How ? What for ? Notes
Dismounting • Unscrew four Fastening Screws 100. • Take down the toolholder. • Block the coolant spout ...	... if required.
Mounting • Fit another toolholder ... • Screw in and tighten four Fastening Screws 100.	... set in place by the two locating pins.

3.7.2 (306070) HF Drilling Spindle

- On Machines: 199223 & 199225

DECO 20&25

Components :		TB Ident. No.
010	Spindle NR-401 E	217137
020	Speed Reducer 1:4 ARG-01E	217139
030	Motor EM-401	217140
100	HF Generator NE-52	226788

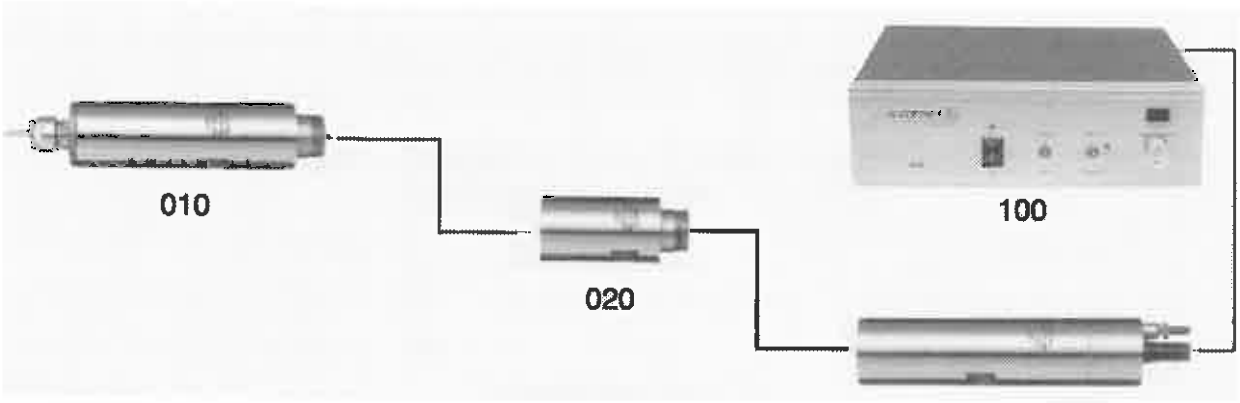

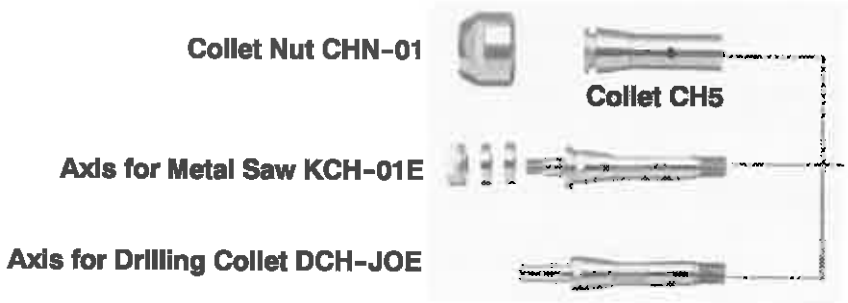

EQUIPMENT FOR HF DRILLING SPINDLE

Item		Designation	Notes
-	306066	30mm-ID Toolholder	Required o'n: see Para. 3.7.1 above.
-	306087	HF Generator Enclosure	Required o'n: see Para. 3.7.3 below.
-	306041	15bar-Pump	Facultative option: see Para. 6.2.

DESCRIPTION

MOUNTING POSITIONS FOR HF DRILLING SPINDLES

Note : Maximum **2** (two in total) HF drilling and/or slotting spindles per machine.

Location	Modularity	Mounting Positions
X1-Y1 gang :	yes	T11 to T15
Frontwork gang :	yes	T31 to T34
Axial backwork gang :	yes	T41 to T44
Cross backwork gang :	yes	T51 to T53

DATA

HF DRILLING SPINDLE DATA

Note : Delivery includes motor, HF spindle and speed reducer

• Motor cooling :		air
• Speed reducer ratio :	acc. to speed range :	1 : 4
• Spindle collet capacity :		3 mm ∅
• Motor output :	at 3000 rpm :	210 W
• Spindle speed [rpm] :	**without reducer**	**with 1:4 reducer**
	2000 - 40000	500 - 10000
• Torque rating [Nm] :	0.07	0.28

MACHINING SCOPE

HF DRILLING SPINDLE MACHINING SCOPE

⚠ **Caution !**

- The spindle is not designed for heavy cutting.
- The speed reducer used here to increase the machining scope (by increasing the torque) may lower the spindle efficiency.
- Determine the actual machining scope in practical tests !

Note : Feedrate = 0.01 x ∅ / rev

Stock	Drilling capacity [mm]	
	without reducer	with reducer
Brass	3	4
Ck45	1.5	2.5
100Cr6	1	2

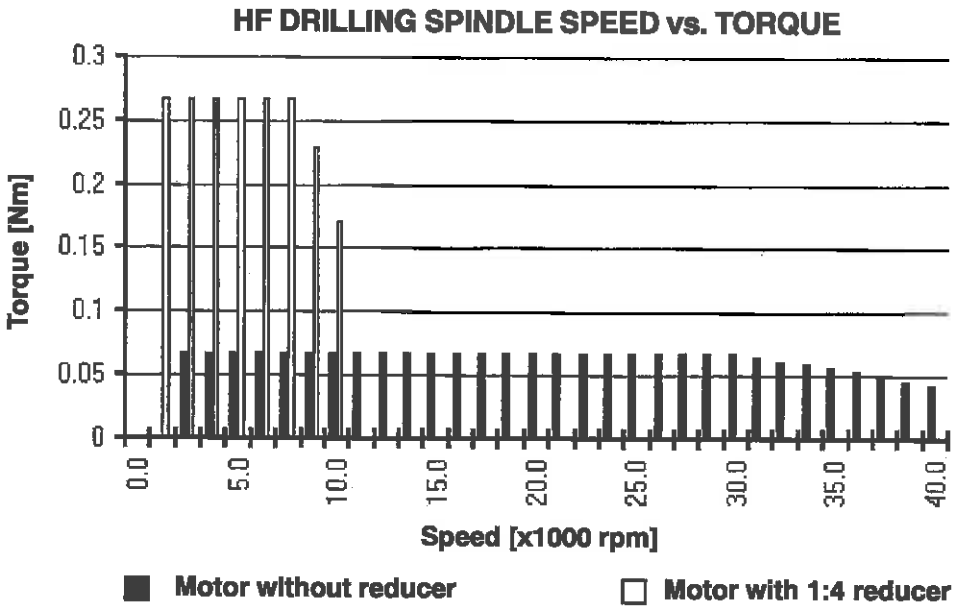

306070 b

MOUNT

INSTALLATION OF HF DRILLING SPINDLE	
To start with : See Instructions for NSK ASTRO-E SYSTEM HF Drilling Spindle (included in the delivery).	
What to do ?	How ? What for ? Notes
• Fit in the HF generator enclosure and the generator in the machine. • Connect electrics and pneumatics to the generator.	For details of the enclosure, see Para 3.7.3 below.

MOUNT / ADAPT SPEED RANGE

MOUNTING SPEED REDUCER for HF Drilling Spindle	
To start with : See Instructions for NSK ASTRO-E SYSTEM HF Drilling Spindle (included in the delivery). Dismount the motor-spindle assembly.	
What to do ?	How ? What for ? Notes
• Unscrew the spindle from its motor.	
• Screw in the speed reducer ...	... between the spindle and the motor. Proceed carefully.
• Fit the spindle in place on the machine.	

3.7.3 (306087) HF Generator Enclosure

- On Machines: 199223 & 199225

DECO 20&26

Components :

010 Casing

020 Cover

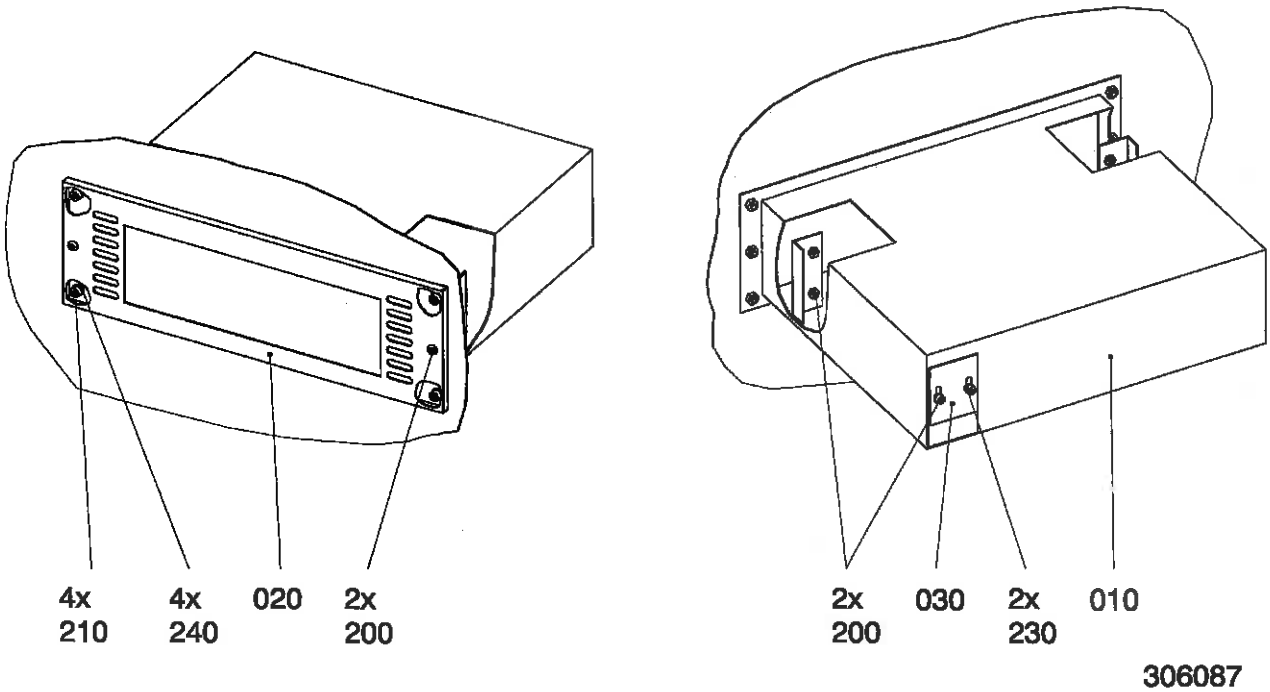

EQUIPMENT

EQUIPMENT USED IN CONJUNCTION WITH HF GENERATOR ENCLOSURE			
HF Generator Enclosure (306087) is of modular design.			
Item		**Designation**	**Notes**
–	306070	HF Drilling Spindle	For details, see Para. 3.7.2 above.
–	306080	HF Slotting Spindle	For details, see Para. 3.8.3 below.

3.8 HIGH-FREQUENCY MILLING AND SLOTTING (15000 RPM)

3.8.1 (306066) 30mm-ID Toolholder, see Para. 3.7.1

3.8.2 (306087) HF Generator Enclosure, see Para. 3.7.3

3.8.3 (306080) HF Slotting Spindle

- On Machines: 199223 & 199225

DECO 20&26

Components :

		TB Ident. No.
010	Angle Spindle RA-150E 90°	217138
020	Speed Reducer 1:4 ARG-01E	217139
030	Motor EM-401	217140
100	HF Generator NE-52	226788

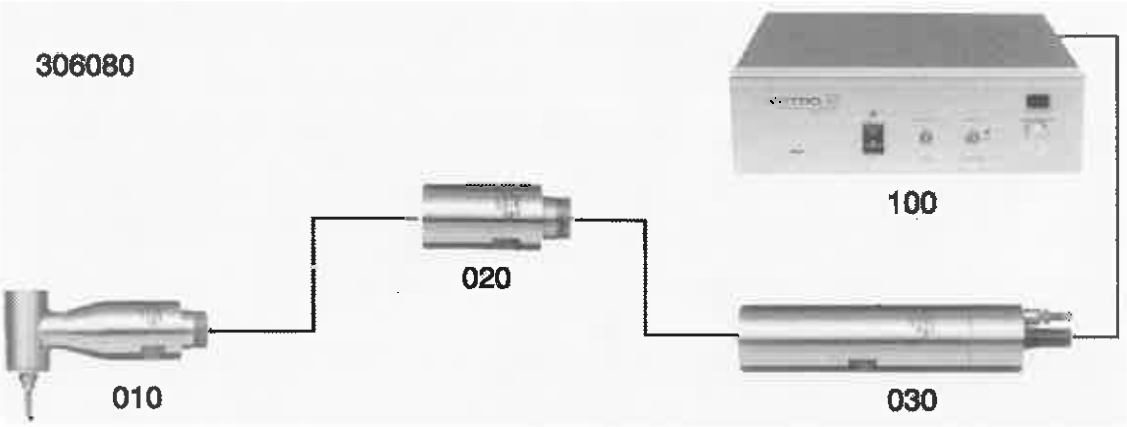

Collet CH8

Axis for Metal Saw KCH-02

EQUIPMENT FOR HF SLOTTING SPINDLE

Item		Designation	Notes
-	306066	30mm-ID Toolholder	Required option: see Para. 3.7.1.
-	306087	HF Generator Enclosure	Required option: see para. 3.7.3.
-	306088	HF Slotting Spindle Orientation Device	Required option: see next para.
-	306041	15bar-Pump	Facultative option: see Para. 6.2.

DATA

HF SLOTTING SPINDLE DATA		
Note : Delivery includes motor, HF spindle and speed reducer Maximum 2 (two in total) HF drilling and/or slotting spindles per machine.		
• Motor cooling :		air
• Speed reducer ratio :	acc. to speed range :	1 : 4
• Spindle :	with 90° angle	i = 1 : 2.67
• Motor output :	at 3000 rpm :	210 W
• Spindle speed [rpm]:	**without reducer**	**with 1:4 reducer**
	750 - 15000	187 - 3750
• Torque rating [Nm] :	0.18	0.75

HF SLOTTING SPINDLE PERFORMANCE

▲ **Caution !**

- The spindle is not designed for heavy cutting.
- The speed reducer used here to increase the machining scope (by increasing the torque) may lower the spindle performance.
- Determine the actual machining scope in practical tests !
- The bulk of the HF slotting spindle, mounted on the X1-Y1 or X2-Y2 gang on the vertical, may reach over the tool line and preclude simultaneous work with both gangs !

HF SLOTTING SPINDLE SPEED vs. TORQUE

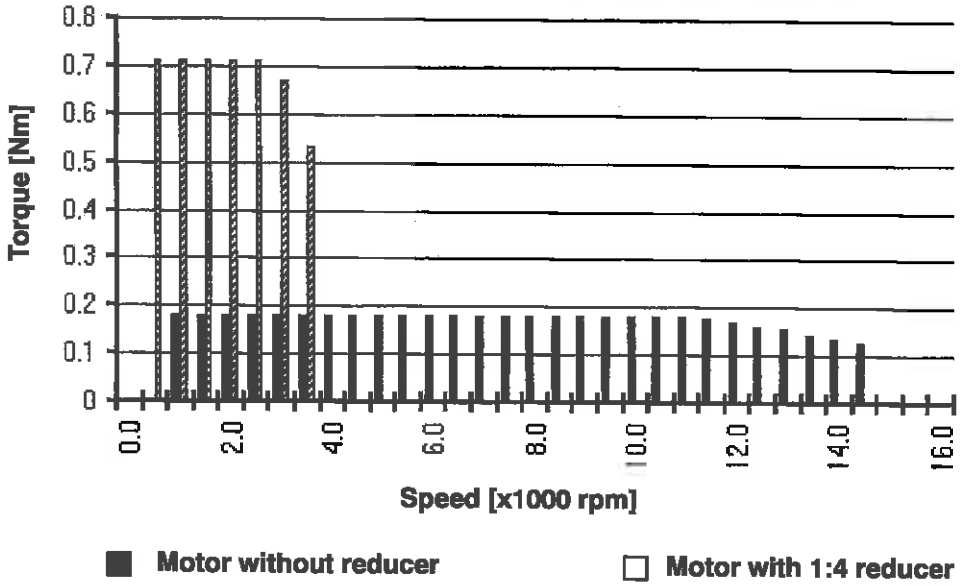

306080 b

MOUNT

INSTALLATION OF HF SLOTTING SPINDLE	
To start with : See Instructions for NSK ASTRO-E SYSTEM HF Slotting Spindle (included in the delivery).	
What to do ?	How ? What for ? Notes
• Fit in the HF generator enclosure and the generator in the machine. • Connect electrics and pneumatics to the generator.	For details of the enclosure, see Para 3.7.3.

MOUNT / ADAPT SPEED RANGE

MOUNTING SPEED REDUCER for HF Slotting Spindle	
To start with : See Instructions for NSK ASTRO-E SYSTEM HF Slotting Spindle (included in the delivery). Dismount the motor-spindle assembly.	
What to do ?	How ? What for ? Notes
Dismounting / Setting / Mounting	
• Unscrew) the spindle from its motor.	
• Screw in the speed reducer ...	... between the spindle and the motor. Proceed carefully.
• Set the speed range ...	... according to Instruction: NSK ASTRO-E SYSTEM HF Slotting Spindle.
• Fit the spindle in place on the machine.	

3.8.4 (306088) Orientation Device For HF Slotting Spindle

- On Machines: 199223 & 199225 DECO 20&26

Components :

010 Setting plate

020 Bracket

030 Spacer

ORIENTATION DEVICE DATA AND DESCRIPTION

- Design : modular (with spacers)
- No. spacers : Ident. No. 562422 2
- Spacer thickness : 24.50 mm

DESCRIPTION

MOUNTING POSITIONS FOR HF DRILLING SPINDLE ORIENTATION DEVICES

Note : 2 (two) toolholder positions may be required for the orientation device according to the HF slotting spindle orientation.

Maximum 2 (two in total) HF drilling and/or slotting spindles per machine.

Location	Modu-larity	No. positions required	Mounting Positions	Application	
				Operation	Orientation
X1-Y1 gang	yes	1 to 2	T11 to T15	Drilling	0° to 90°
Frontwork gang	yes	2	T31 to T34	Front slotting	
Cross backwork gang	yes	1 to 3	T51 to T53	Back drilling	0° to 90°

EQUIPMENT USED IN CONJUNCTION WITH ORIENTATION DEVICE

Item		Designation	Notes
-	306066	30mm-ID Toolholder	For details, see Para. 3.7.1.
-	306087	HF Generator Enclosure	For details, see para. 3.7.3.
-	306080	HF Slotting Spindle	For details, see Para. 3.8.3.
-	306041	15bar-Pump	For details, see Para. 6.2.

3.9 BAR RETENTION

3.9.1 (306084) Bar Retention Claws

- On Machines: 199223 & 199225

DECO 20&26

Components :

			TB Ident. No.
010	V-claw holder		
030	Setting screw		
040	V-claw	6 to ∅ 11mm ∅	562311
050	V-claw	11 to ∅ 26mm ∅	562312
200	Locking screw		
250	Compression spring		

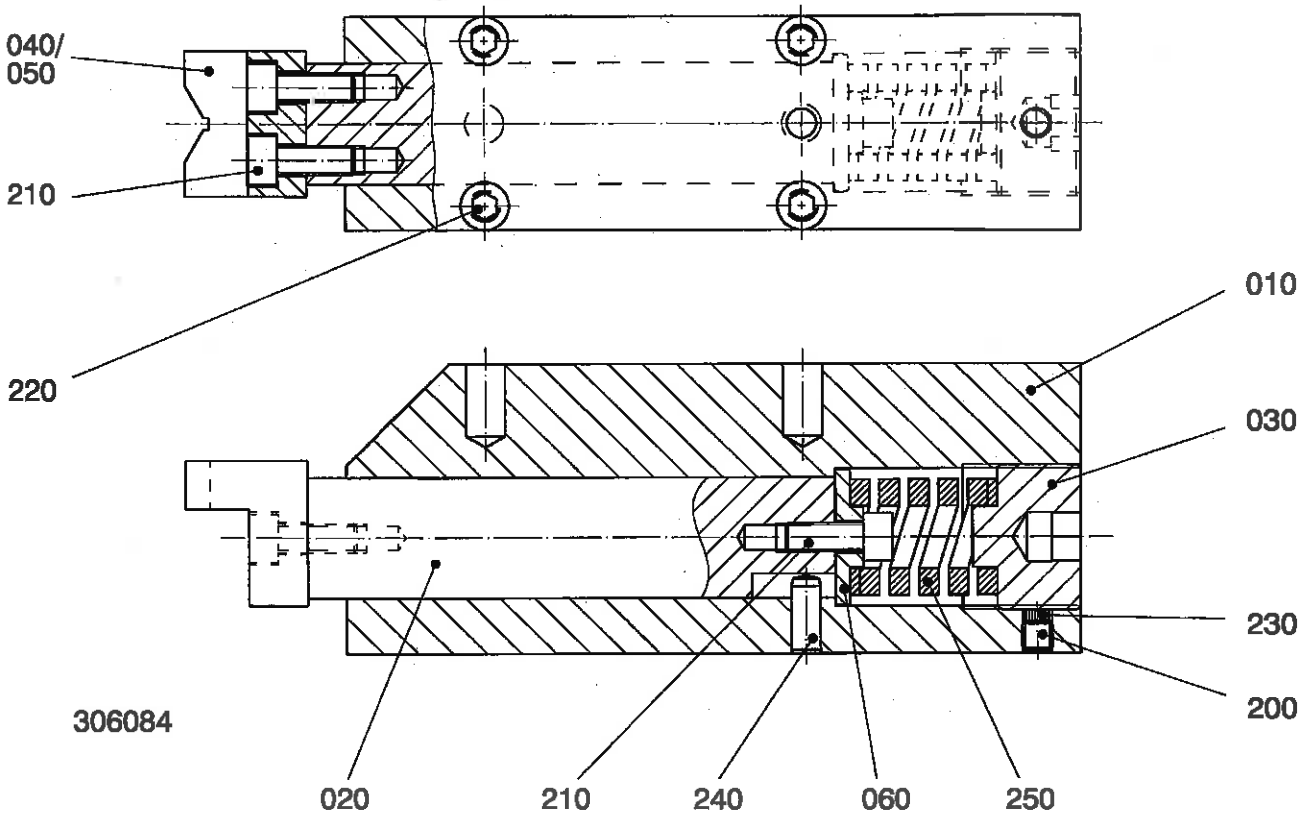

BAR RETENTION CLAWS DESCRIPTION

- Design : modular
- Hydraulics : unnecessary
- Clawing force : adjusted
- Compatibility : with all guidebush types

▲ **Caution !**

Claw the bar simultaneously with both V-claws to avoid lateral stresses on the guidebush.

DESCRIPTION

MOUNTING POSITIONS FOR BAR RETENTION CLAWS			
Location	**Modularity**	**Mounting Positions**	**Notes**
X1-Y1 & X2-Y2 gangs :	yes	T11 and T21	preferably facing each other

DATA

BAR RETENTION CLAWS GEOMETRICS [mm]		
• X1-Y1 & X2-Y2 gangs :	X1, X2	127.5 from the face of a disengaged V-claw
	Y1, Y2	0
	Z1	20

BAR RETENTION CLAWS OPERATION

The bar retention claws system replaces other support devices between the main spindle and the guidebush, used in other TB products.

- Mounting : on X1/Y1 & X2/Y2 gangs in place of toolholder
- Clawing action : X1 and X2-axes approach to claw softly (over springs) the opposite sides of a bar and lock it while the main spindle retreats.

ADJUST

SETTING CLAWING FORCE of Bar Retention Claws

Note : Make sure to set the clawing force of both claws at a time.

What to do ?	How ? What for ? Notes
Dismounting • Loosen Locking Screw 200.	
Setting • Turn in / out Setting Screw 030 to make it flush with Holder 010 ...	... for the standard force of 70 daN.
or • Turn in / out Setting Screw 030 to stress / relax Spring 250 ...	... to set a clawing force required.
Mounting • Tighten Locking Screw 200.	

TORNOS BECHLER

4. FRONTWORKING OPTIONS

Options presented in this chapter are also used on the tool gangs other than the frontwork gang.

The other gangs which can accommodate these options will be specified in the paragraphs below under the toolholder geometrics or as tool positions other than the frontwork gang.

4.1 (306081) DIFFERENTIAL THREADING SPINDLE

- On Machines: 199223 & 199225 DECO 20&26

Components :

040	Collet arbor	210	Rear screw
050	Spindle	220	Fastening screw
060	Toothed wheel	260	Collet nut (M20x1)
070	Rod	270	Coolant spout
080	Ring	290	Compression spring
190	Screwed sealing plug for compressed-air hole	1010	Flats
200	Spindle locking screw	1020	Compressed-air hole

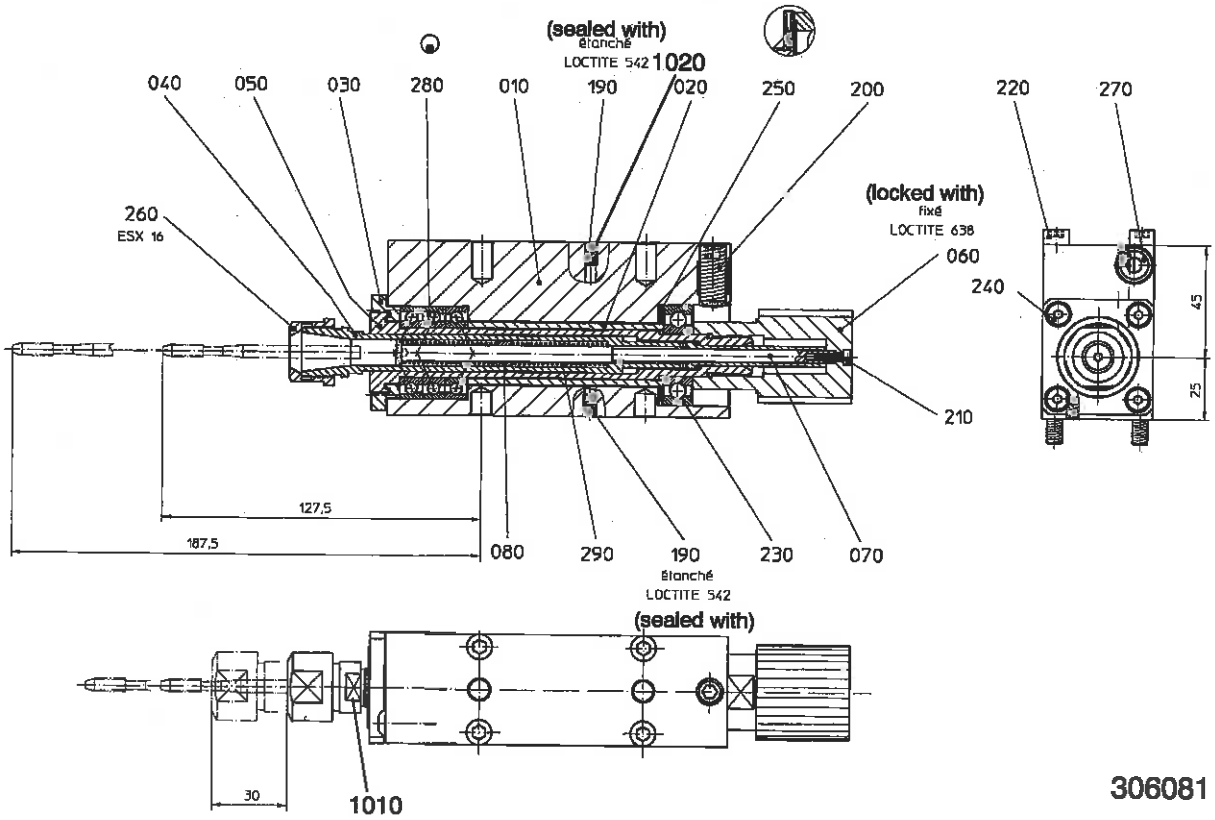

DIFFERENTIAL THREADING SPINDLE DESCRIPTION

- Main components : a spindle and a collet-arbor which slides inside it
- Sliding collet-arbor retract : over two series-mounted springs
  Retract spring torque transfer : over driving square
- Spindle support : preloaded ball bearings in the front, on a deep groove ball bearing in the back
  Spindle bearing greasing : pregreased for life.
  Spindle bearing protection : by compressed air (e.g. from emulsions)
- Spindle drive : over a toothed wheel, screwed and secured at the rear end of the spindle
- Spindle locking : by clamping Screw 200
- Cutting oil supply : from its own spout
- ESX collet nut removal : by holding the spindle over Flats 1010
- 20 mm 2-pos. height setting : by reversal

RECOMMENDED SEQUENCE FOR PROGRAMMING DIFFERENTIAL THREADING

- Rapid traverse
- Threading : 95% lead approx.
- Simultaneous spindle rotation and feed reversal : during extension stroke
- Threading off : 100% lead during compression stroke to avoid any stress on the tap

30 mm extension / compression stroke facilitates the operation.

Note : Short threads, given the 30 mm travel, need not have threading feed.

DESCRIPTION

MOUNTING POSITIONS FOR DIFFERENTIAL THREADING SPINDLE

Location	Modularity	No. tools	Mounting Positions	Notes
X2-Y2 gang :	yes	1 to 4	T22 to T25	
Frontwor gang :	yes	1 to 4	T31 to T34	
Axial backwork gang :	yes	1 to 4	T41 to T44	with spindle locked
Cross backwork gang :	yes	1 to 3	T51 to T53	

DATA

DIFFERENTIAL THREADING SPINDLE DATA [mm]		
General :		
• Capacity :	ESX 16 collet : ET 16 collet :	0.5 – 10 1 – 10
• Extension / compression stroke :	max.:	30
• 2-position height setting :	max.:	20
• Speed :	max.:	8000 rpm
Geometrics :		
• X2-Y2 gang :	X2 Y2 Z1	127.5 0 25 or 45
• Frontwork gang :	X3 (Y3) Z3	0 25 187.5
• Cross backwork gang :	X4 Y4 Z4	127.5 0 25 or 45

CHANGE

ESX 25 DRILLING SPINDLE / TOOLHOLDER CHANGE

To start with : Loosen or remove the drive belt.
See also : S2 Drive (306035), see Para. 3.8.6
in your Instructions 300401 for DECO 20
in your Instructions 300441 Index for DECO 26
S3 Drive (306011), Para. 4.3.1.
S5 Drive (306036), Para. 5.4.1 (cross).
S5 Drive (306099), Para. 5.5.1 (axial).

What to do ?	How ? What for ? Notes
Dismounting	
• Disconnect the compressed-air pipe ...	... if required.
• Unscrew the four fastening screws.	
• Take down the toolholder.	
• Block the cutting oil spout ...	... if required.
Mounting	
• Make sure that Screws 190 and 200 do not jut out of the bearing face ...	... to assure snug fit of the toolholder.
• Fit another toolholder ...	... set in place by the two locating pins.
• Screw in and tighten the four fastening screws.	
• Connect the compressed-air pipe to Compressed-Air Hole 1020.	• Unless the option is available, block both M5x6 holes.
• Fit in and tension the drive belt.	

CLEAN & GREASE

CLEANING & GREASING OF SLIDING ARBOR for Differential Threading Spindle

Maintenance Interval : Grease the sliding arbor semi-annually or at least every 1000 hours' operation.

What to do ?	How ? What for ? Notes
Dismounting	
• Undo and remove Screw 210 ...	... while holding Rod 070 with Allen key.
• Remove Rod 070 with its springs.	Attention ! Spring thrust
• Remove Collet Arbor 040.	
Cleaning	▲ **Caution !**
• Check and clean Spindle 050 inside.	• Check for the state of inside surfaces.
• Clean Collet Arbor 040.	• Check for the state of inside surfaces.
Greasing	
• Grease Collet Arbor 040 before inserting it in the spindle.	Inject some grease from the grease gun and spread it manually outside the arbor.
Mounting	
• Fit Collet Arbor 040 in up to the stop.	
• Fit Springs 290 on Rod 070.	• Fit Ring 080 between the two springs.
• Fit Rod 070 inside Collet Arbor 040.	• Compress the springs.
• Fit Screw 210 ...	... while holding Rod 070 with Allen key.

TORNOS BECHLER

4.2 (306039) 20MM-ID TOOLHOLDER

- On Machines: 199223 & 199225

DECO 20&26

Components :

020 Toolholder

100 Tool clamping screw

110 Fastening screws

120 Coolant spout

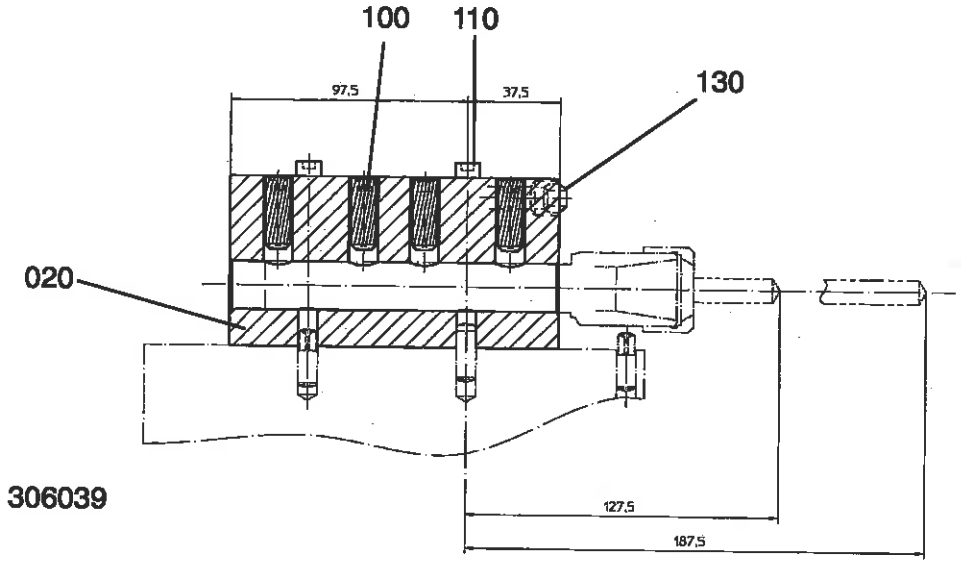

▲ **Caution !**

A tool must not protrude at the back of 20mm-ID Toolholder (306039) as this may cause conflicting geometrics with the protective shutters of the live-spindle drives.

DESCRIPTION

MOUNTING POSITIONS FOR 20mm-ID TOOLHOLDERS

Location	Modularity	No. toolholders	Mounting Positions
X1-Y1 & X2-Y2 gangs :	yes yes	1 to 5 1 to 5	T11 to T15 T21 to T25
Frontwork gang :	yes	1 to 4	T31 to T34
Axial backwork gang :	yes	1 to 4	T41 to T44
Cross backwork gang :	yes	1 to 3	T51 to T53

DATA

20mm-ID TOOLHOLDER DATA
[mm]

General :

- Capacity : ID Ø 20 H6

Geometrics :

		Front Location Pins	Rear Location Pins
• Toolholder shaft :	front / back :	37.5 / -97.5	97.5 / -37.5
• X1-Y1 & X2-Y2 gangs :	X1,X2 Y1,Y2 Z1	127.5 0 25	
• Frontwork gang :	X3 (Y3) Z3	0 25 187.5	0 25 187.5
• Axial backwork gang :	X4 Y4 Z4	25 0 187.5	25 0 187.5
• Cross backwork gang :	X4 Y4 Z4	127.5 0 25	

20mm-ID TOOLHOLDER DESCRIPTION

The bore allows for a modular customer-friendly application of standard and other tooling.

- Cutting oil supply : bore available for oil spout
- Tool clamping : with clamping screws
- Standard mounting : on rear+mid pins
- Special mounting : on front and mid pin
  to reduce overhang for short tools :
  ◇ in T31 to T34 on frontwork gang
  ◇ in T41 to T44 on backwork gang

Note : Reverse the toolholder by 180° to assure coolant supply.

▲ **Caution !**

Make absolutely sure to check the toolholder alignment in Y-axis when remounting it from the front+mid to rear+mid pins or vice versa.

CHANGE

CHANGING 20mm-ID TOOLHOLDER	
To start with : Set the machine in the reference position.	
What to do ?	How ? What for ? Notes
Dismounting • Unscrew four Fastening Screws 110. • Take down the toolholder. • Block the oil spout ...	... if required.
Mounting • Fit another toolholder ... • Screw in and tighten four Fastening Screws 110.	... set in place by the two locating pins.

EXTENDED COLLET-HOLDER FIXTURE ON 20mm-ID TOOLHOLDER

☐ **Note :**

The distance between the collet nose and the shaft diameter must be ⩽ 40 mm to allow for unhindered application on the X1-Y1 & X2-Y2 gangs.

▲ **Caution !**

If Extension Nut ∅ > 35 mm it conflicts with the front locating pin.

TORNOS BECHLER

4.3 (306040) 25MM-ID TOOLHOLDER

- On Machines: 199223 & 199225

DECO 20&26

- For details, see your Instructions: INSTALLATION - OPERATION - MAINTENANCE,

Para. 10.1	Instructions 300401	DECO 20
Para. 7.1.3	Instructions 300441	DECO 26

4.4 (306011) S3-SPINDLE DRIVE

- On Machines: 199223 & 199225

DECO 20&26

Components :

030 Expanding roller plate

050 Axis of toothed expanding roller

100 Protective shutters

110 Belt guard

360 Fastening screw

370 Expanding roller screw

SPARE PARTS

Item		Designation	No.
330	216951	Syncroflex Belt 32/T5/1315	1
340	216954	Grooved ball bearing 6001-2RZ	10

TORNOS BECHLER

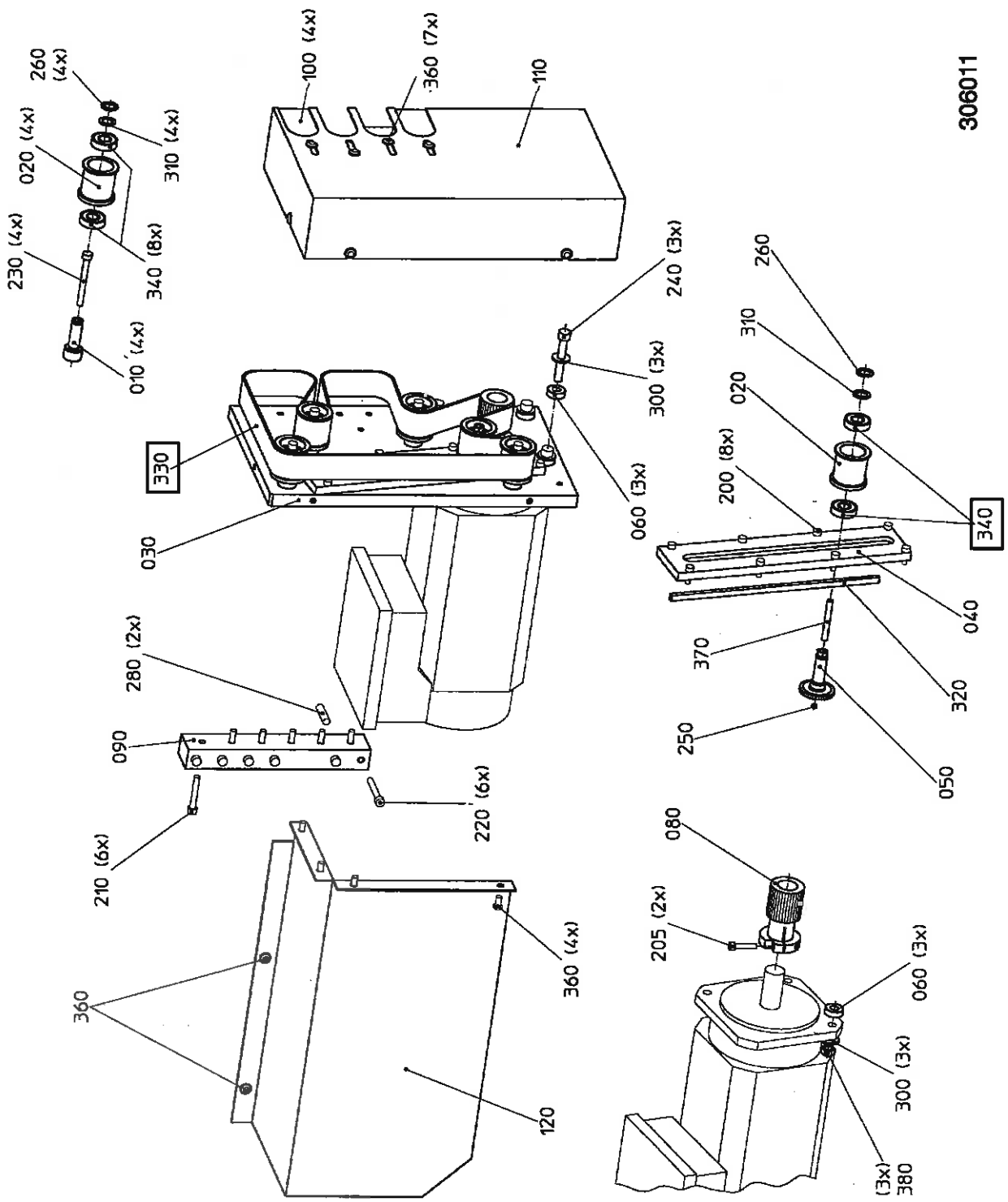

TORNOS BECHLER

S3-SPINDLE DRIVE BELT LAYOUT

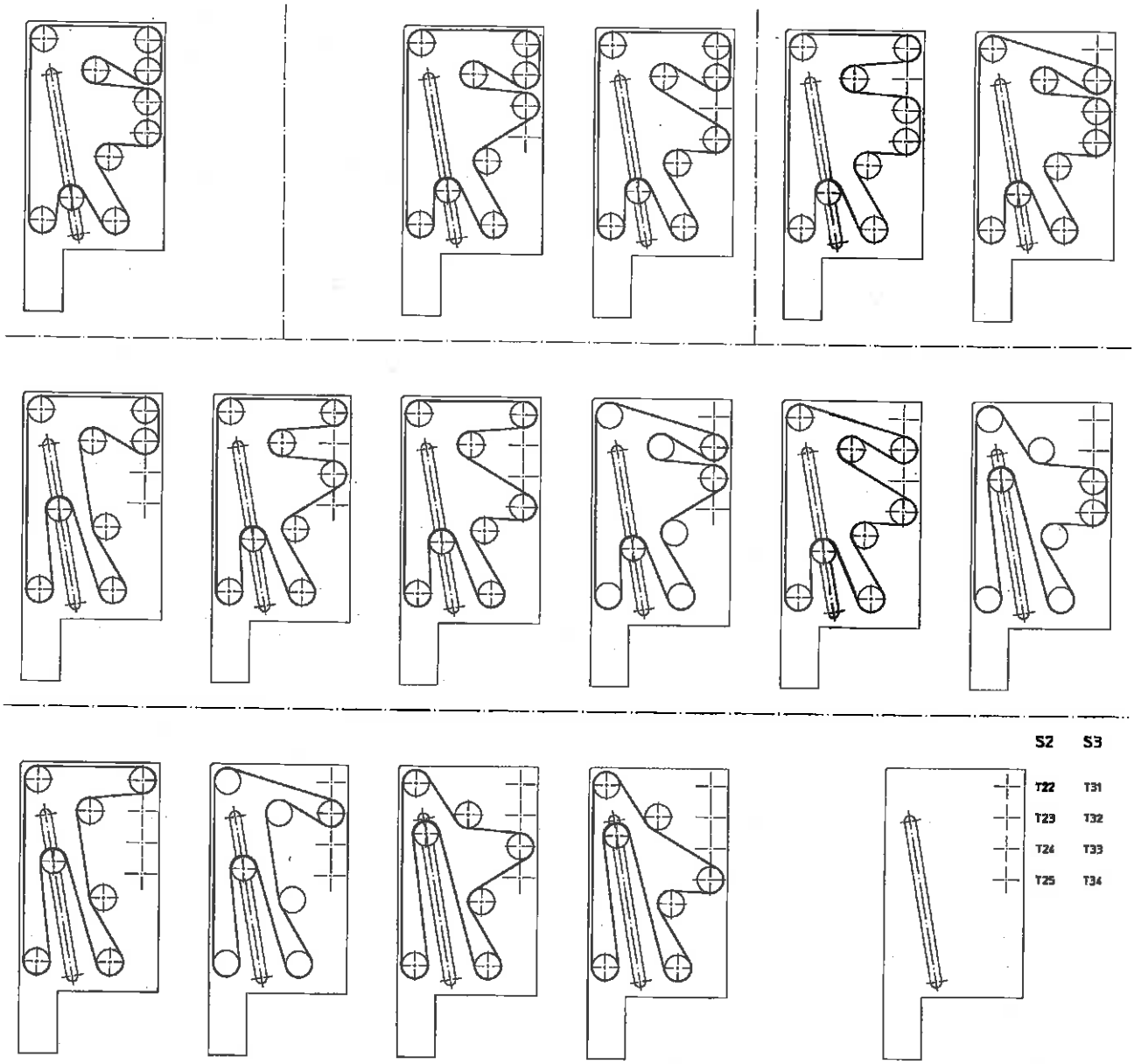

▲ Caution !

Do not admit the coolant unless the belt guard and protective shutters are in place. Otherwise the motor and roller bearings can be damaged / destroyed.

DATA

S3-SPINDLE DRIVE DATA

- No. tools : 1 to 4
- Tool mounting positions : T31 to T34
- Speed : 0 - 6000 rpm
- Motor - spindle ratio : 1

		100% Duty Cycle		50% Duty Cycle max. 15 min
• Motor FANUC alpha C1 :	0 - 6000 rpm	1.50 kW		2.20 kW
• Spindle torque at :	0 - 3000 rpm	4.77 Nm		7.00 Nm
	6000 rpm	2.39 Nm		3.50 Nm
• Acceleration time :	0 - 6000 rpm	0.69 s *	to	0.47 s *

* *Final characteristics depend on live units and tooling.*

MACHINING SCOPE

TAPPING SCOPE OF S3-SPINDLE

- Machining scope at high speed is limited by its drive system.
- The data in this table are theoretical estimates to be confirmed in practical trials. A half-worn tool has been assumed for the estimates.

Stock	Tapping capacity	
	0 - 3000 rpm	6000 rpm
Brass	M10	M8
9SMnPb36	M8	M5
Ck45	M6	M5
100Cr6	M6	M5

S3-SPINDLE SPEED vs. TORQUE / ACCELERATION TIME

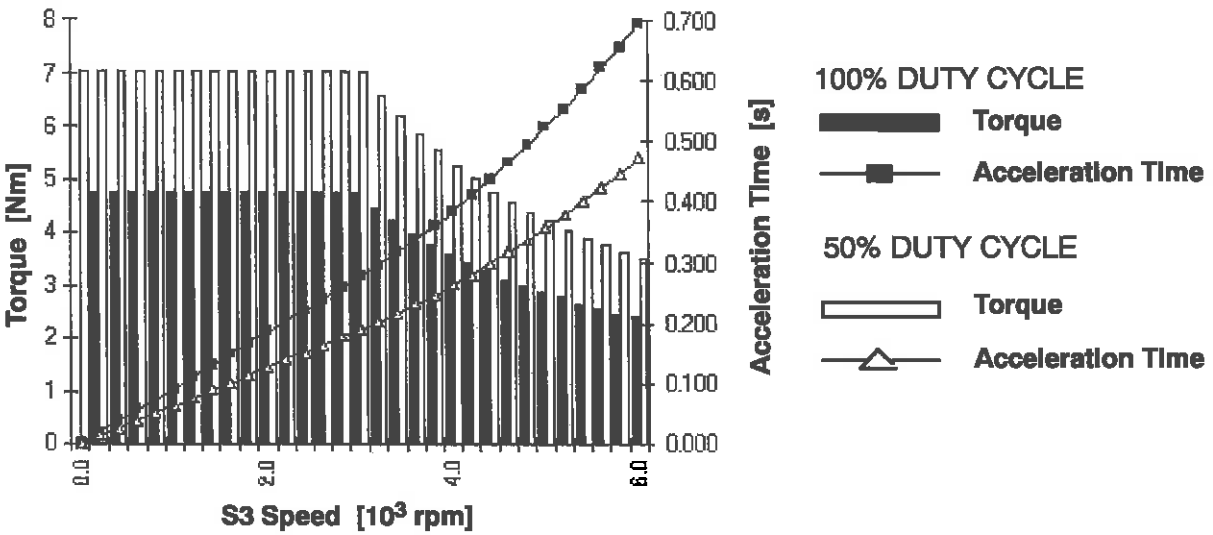

S3-SPINDLE DRIVE OPERATION / DESCRIPTION

- Application : live tools for frontwork such as drilling, , milling, etc.
- Type : asynchronous
- Transmission : over timing belt on toothed wheels without backlash
- Belt tensioning : with a single expanding roller
- Drive protection : with protective shutters

DISMOUNT / MOUNT / CHANGE

S3-DRIVEN TOOLHOLDER INSTALLATION
or S3-Driven / Stationary Toolholder Change

To start with : Put the machine in SETTING mode.

What to do ?	How ? What for ? Notes
Dismounting	
• Take down Belt Guard 110 ...	... by unscrewing three Screws 360.
• Shift the expanding roller to relax the belt ...	... but first loosen Expanding Roller Screw 370 and unscrew Axis 050.
• Unscrew the fastening screws of the toolholder.	
• Remove the stationary toolholder.	
Mounting	
• Fit the S3-driven toolholder ...	... set in place by the two locating pins.
• Screw in and tighten its fastening screws.	
• Fit the belt on the drive pulleys.	See S3-Spindle Drive Belt Layout, earlier in this paragraph.
• Tension the belt ...	... by shifting the toothed expanding roller: for details, see your Instructions 300401, Para. 2.2.4.
Adjust / close Protective Shutters 100 respectively :	*acc. to live / stationary tool change.*
• Mount and fasten Belt Guard 110 ...	... with three Fastening Screws 360.
• Adjust and lock Protective Shutters 100.	

4.5 (306096) LONG DRILLING SPINDLE FOR ESX 25-COLLET

- On Machines: 199223 & 199225

DECO 20&26

Components :

010 Toothed wheel
040 Spindle
100 Screwed sealing plug for compressed-air hole
110 Spindle locking screw
120 Fastening screw
160 Collet nut (EX25 M M30x1)
170 Coolant spout
1010 Flats
1020 Compressed-air hole

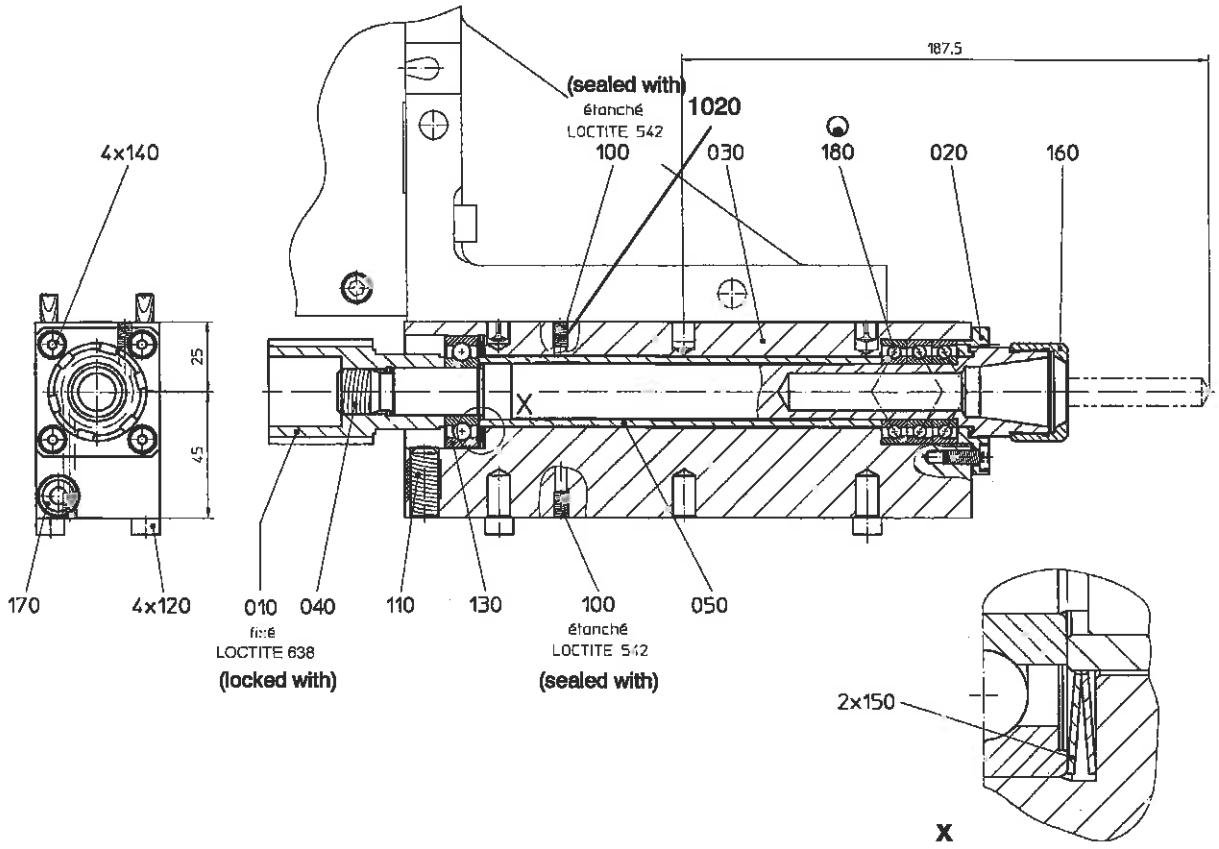

306096_1

SERVICE TOOLING FOR ESX 25 LONG DRILLING SPINDLE

Item		Designation	Application
-	595816	Wrench EM258	For EX25 Collet Nut Schaublin No. 61-25812

ESX 25 LONG DRILLING SPINDLE

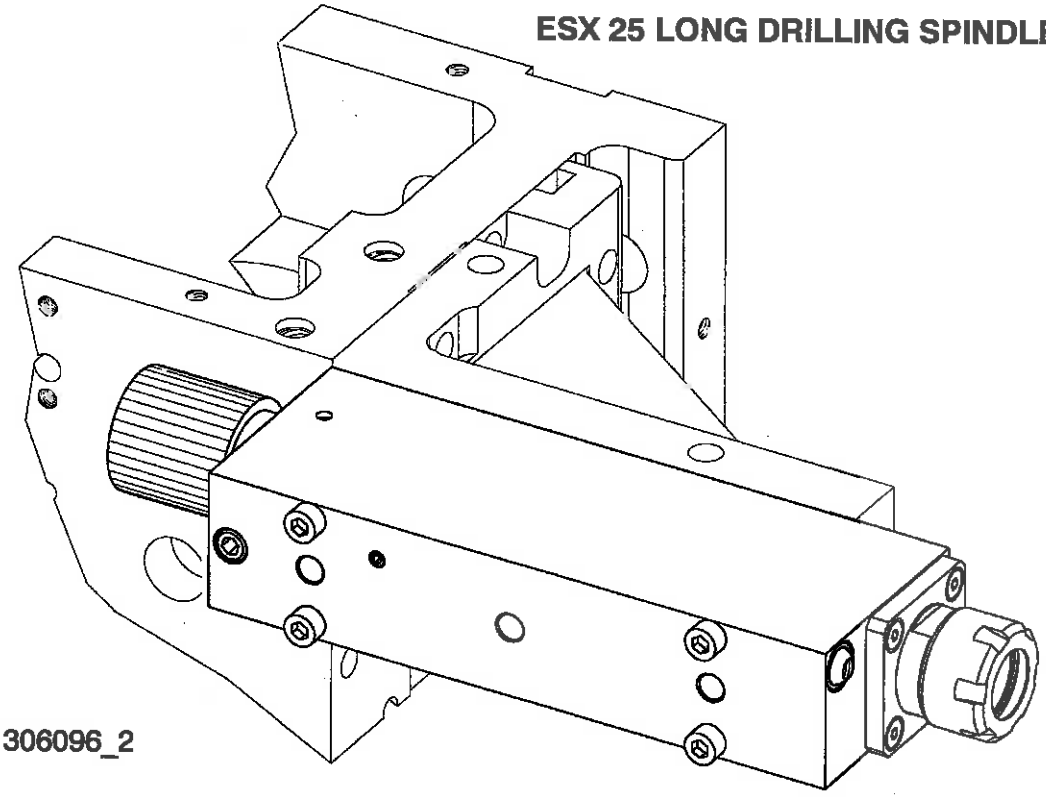

306096_2

DESCRIPTION

MOUNTING POSITIONS FOR ESX 25 LONG DRILLING SPINDLE

Location	Modularity	No. tools	Mounting Positions
Frontwork gang :	yes	1 to 4	T31 to T34
Axial backwork gang :	yes	1 to 4	T41 to T44

DATA

ESX 25 LONG DRILLING SPINDLE DATA
[mm]

General :		
• Capacity :	ESX 25 collet :	1 - 16
	ET 25 collet :	M3.5 - M10 (M12)
	Slitting saw ∅, max.:	50
• 2-position height setting :	max.:	20
• Speed :	max.:	8000 rpm
Geometrics :		
• Frontwork gang :	X3	0
	(Y3)	25
	Z3	187.5
• Axial backwork gang :	X4	0
	Y4	25
	Z4	187.5

ESX 25 LONG DRILLING SPINDLE OPERATION

- Toolholding spindle support : preloaded ball bearings in the front, on a deep groove ball bearing in the back
- Spindle bearing greasing : The bearings are pregreased for life.
- Bearing protection : by compressed air (e.g. from emulsions)
- Spindle drive : over a toothed wheel, screwed and secured at the rear end of the spindle
- Spindle locking : by clamping Screw 110
- Cutting oil supply : from its own spout for drilling (Height geometrics: 25 mm) no own oil spout for milling (Height geometrics: 45 mm)
- ESX collet nut removal : by holding the spindle over Flats 1010
- 20 mm 2-pos. height setting : by upside-down reversal

CHANGE

ESX 25 LONG DRILLING SPINDLE / TOOLHOLDER CHANGE

To start with : Loosen or remove the drive belt.

See also : S3 Drive (306011), Para. 4.3.1.

S5 Drive (306099), Para. 5.5.1 (axial).

What to do ?	How ? What for ? Notes
Dismounting	
• Disconnect the compressed-air pipe ...	... if required.
• Unscrew the four fastening screws.	
• Take down the toolholder.	
• Block the cutting oil spout ...	... if required.
Mounting	
• Make sure that Screws 100 and 110 do not jut out of the bearing face ...	... to assure snug fit of the toolholder.
• Fit another toolholder ...	... set in place by the two locating pins.
• Screw in and tighten the four fastening screws.	
• Connect the compressed-air pipe to Compressed-Air Hole 1020.	• Unless the option is available, block both M5x6 Holes 1020.
• Fit in and tension the drive belt.	

TORNOS BECHLER

5. PICKOFF SPINDLE AND BACKWORKING OPTIONS

5.1 PICKOFF SPINDLE COLLET SLEEVES

- On Machine 199225 DECO 26

5.1.1 (306134) F25-Collet Sleeve For DECO 26 Pickoff Spindle

F25-COLLET SLEEVE APPLICATION
- On Machine 199225 **DECO 26**

See also Para. 6.6.1 (Standard) F37-Collet Sleeve For S4 Pickoff Spindle, in your Instructions 300441.

5.1.2 (306135) F30-Collet Sleeve For DECO 26 Pickoff Spindle

F30-COLLET SLEEVE APPLICATION
- On Machine 199225 **DECO 26**

See also Para. 6.6.1 (Standard) F37-Collet Sleeve For S4 Pickoff Spindle, in your Instructions 300441.

5.1.3 (306127) F37-Collet Sleeve For DECO 26 Pickoff Spindle

F37-COLLET SLEEVE APPLICATION
- On Machine 199225 **DECO 26**

See also Para. 6.6.1 (Standard) F37-Collet Sleeve For S4 Pickoff Spindle, in your Instructions 300441.

5.2 PART EJECTOR WITH COLLET FLUSHING FOR DECO 20

- Machine: 199223

DECO 20

5.2.1 (306151) Ejector with Spring

With pickoff spindle 20 mm (306004)

DESCRIPTION

Revolving ejector mounted in pickoff spindle with possibility of collet cleaning by cutting liquid.

It can be used alone or with collet cleaning 306152.

The ejector is usable with capacities of collets F30 and F25, but incompatible with F20 and smaller.

GENERAL CHARACTERISTIC

Travel :	max.	50 mm

DESCRIPTION OF OPERATION

The ejector is mounted at the back of the pickoff spindle.

The part is ejected from the pickoff spindle by the endpiece of the ejector.

Ejector feed is realized by the spring.

At the introduction into the collet (length max. 50 mm.) the part pushes the endpiece and compresses the spring.

LOCATION OF COMPONENTS

90-100	Endpieces
30	Tube
220	Spring

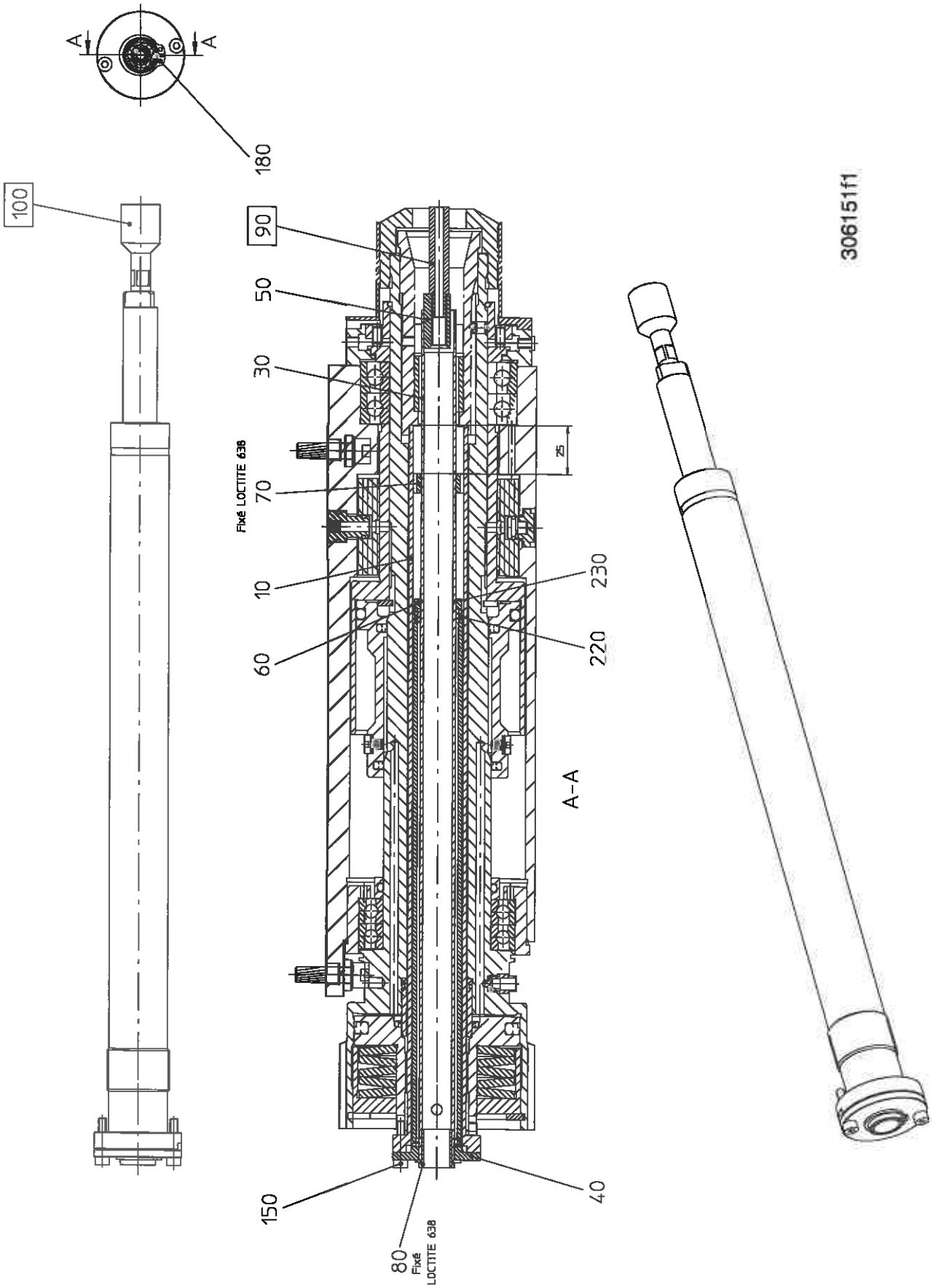
A
A
180
100
90
50
30
Fixé LOCTITE 638
70
10
60
25
230
220
A-A
150
80
Fixé
LOCTITE 638
40
30615111

REMOVAL OF THE EJECTOR

Operations	Remarks
Lay down the left guard of the enclosure	
Unscrew the 2 head screws 150 with hexagonal interior	
Remove ejector.....	.....manually by the back of the pickoff spindle

INSTALLATION OF THE EJECTOR

Operations	Remarks
Introduce the ejector into the pickoff spindle	On the back of the pickoff spindle
	Center le flange 40 in relation to the thrust tube
Introduce and screw the two head screws 150 with hexagonal interior	
Install the left guard of the enclosure	

CHANGE OF THE ENDPIECE OF THE EJECTOR

TO START WITH : Pickoff spindle in rear position

Operations	Remarks
DISMOUNTING	
Dismount the ejector	as above
Unscrew the endpiece	Flat key of 8 mm and pin ∅ 5 mm (hole at the back of the tube).
MOUNTING	
Screw the new endpiece	
Install the ejector	as above

SPARE PARTS

Item		Designation	Nbr.
90	562757	Endpiece diameter 10 mm	1
100	562758	Endpiece diameter 20 mm	1

5.3 PICKOFF SPINDLE COLLET FLUSHING FOR DECO 20

- Machine: 199223

DECO 20

5.3.1 (306152) Pickoff Spindle Collet Cleaning

With pickoff spindle 20 mm (306004)

DESCRIPTION

Device mounted in the interior of the pickoff spindle to allow the cleaning of the collet

- Mounting at the back of opposite spindle
- It can be used alone or with ejector 306151
- It requires the coolant pump 306150.

DESCRIPTION OF OPERATION

The oil gets from the pump to the connection 80 by a flexible tube diam. 10 mm, length 6 m.

LOCATION OF COMPONENTS

70	Flange
80	Connection
90	Endpiece

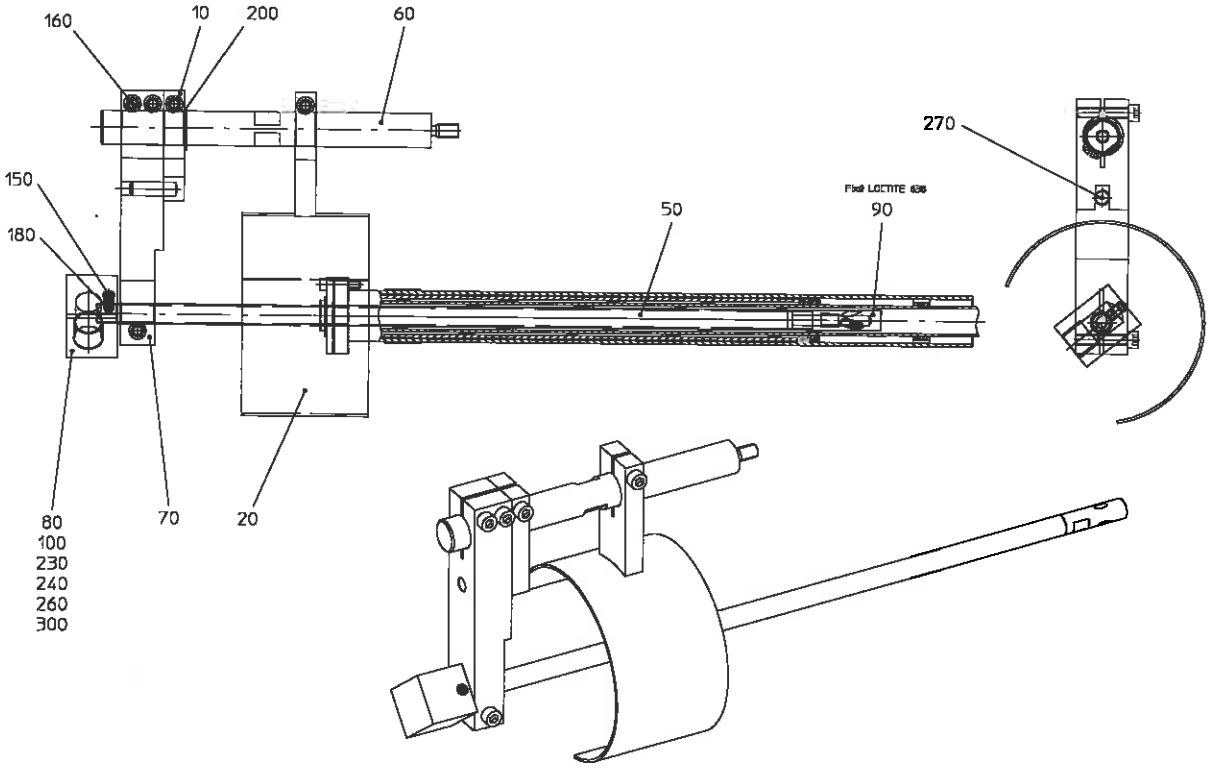

REMOVAL OF DEVICE

TO START WITH: Pickoff spindle in rear position.
Coolant pump 306150 stopped.

Operations	Remarks
Lay down connection 80 with the tube	Unscrew screw 150
Lay down the tube with the flange	Unscrew the two screws 160 above.

INSTALLATION OF THE DEVICE

Operations	Remarks
	On the back of the pickoff spindle:
Introduce the tube with the flange into the pickoff spindle	Tighten the two screws 160
Install the connection 80	Tighten the screw 150

5.4 FLUSHNG PNEUMATICS FOR DECO 20 & DECO 26

- Machine: 199223 & 199225

DECO 20 & 26

5.4.1 (306153) Flushing Pneumatics

For the cleaning of pickoff spindle collets 306152 and 306155

DESCRIPTION

Pneumatic control of the cleaning of pickoff spindle collet

OPERATION

The distributor 040 controls the opening and the closing of wedge-type valve 050.

This valve is necessary for the application of drilled tools with coolant 15 bars.

▲ **Caution !** When used exclusively with collet cleaning 306152 and 306155 respectively, the valve must always be open before the engagement of the pump 306150.

LOCATION OF COMPONENTS

040 Electro-distributor 5/2

050 Wedge-type valve

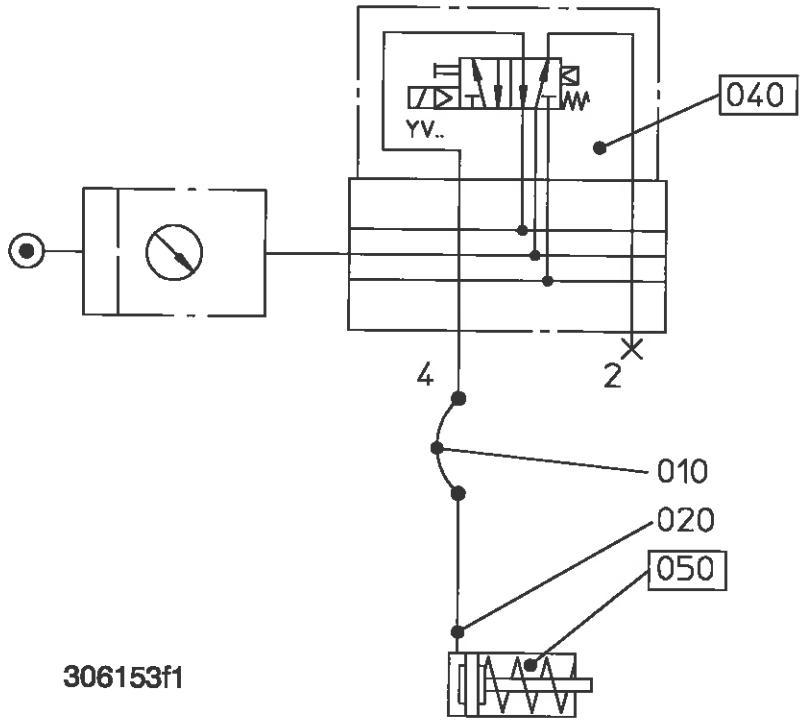

306153f1

SPARE PARTS

Item		Designation	Nbr.
040	217570	Distributor 5/2 monostable 24 V FESTO MN2H-5/2-D-02-FR	1
050	217688	Wedge-type valve BACHOFEN 15V 100020	1

TORNOS BECHLER

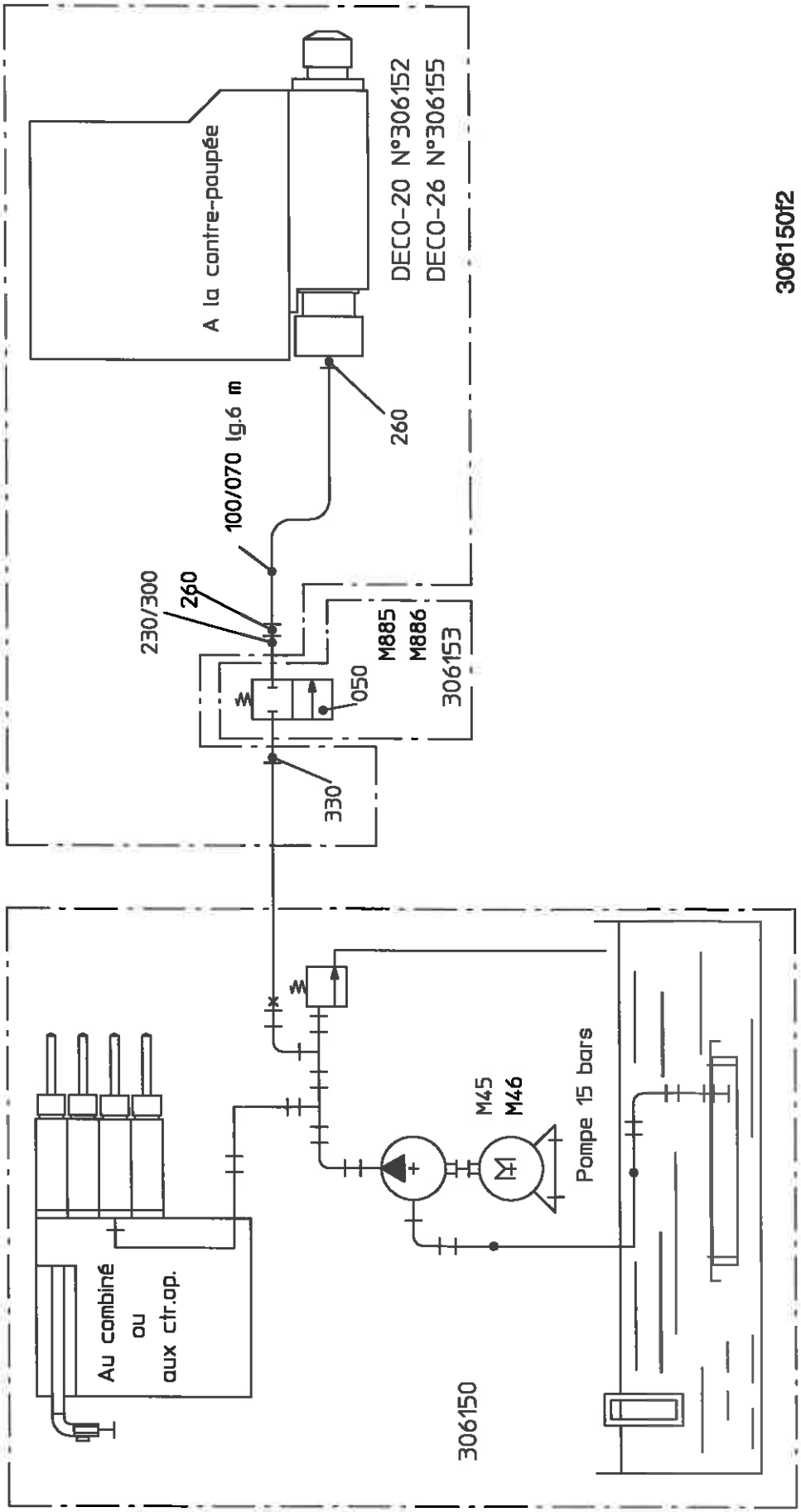

306150f2

5.5 PART EJECTOR WITH COLLET FLUSHING FOR DECO 26

- Machine: 199225

DECO 26

5.5.1 (306154) Ejector with Spring

With pickoff spindle 26 mm (306107)

DESCRIPTION

Revolving ejector mounted in pickoff spindle with possibility of collet cleaning by cutting liquid.

- It can be used alone or with collet cleaning 306155
- The ejector is usable with capacities of collets F37 and F30, but incompatible with F25 and smaller.
- Two different springs (16 daN and 6 daN) are at disposal. Mount the one which suits best according to the part weight.

GENERAL CHARACTERISTIC

Travel :	max.	50 mm

DESCRIPTION OF OPERATION

The ejector is mounted at the back of the pickoff spindle.

The part is ejected from the pickoff spindle by the endpiece of the ejector.

Ejector feed is realized by the spring.

At the introduction into the collet (length max. 50 mm) the part pushes the endpiece and compresses the spring.

LOCATION OF COMPONENTS

50-70	Endpieces
90	Tube
210-220	Spring 16 daN or 6 daN

TORNOS BECHLER

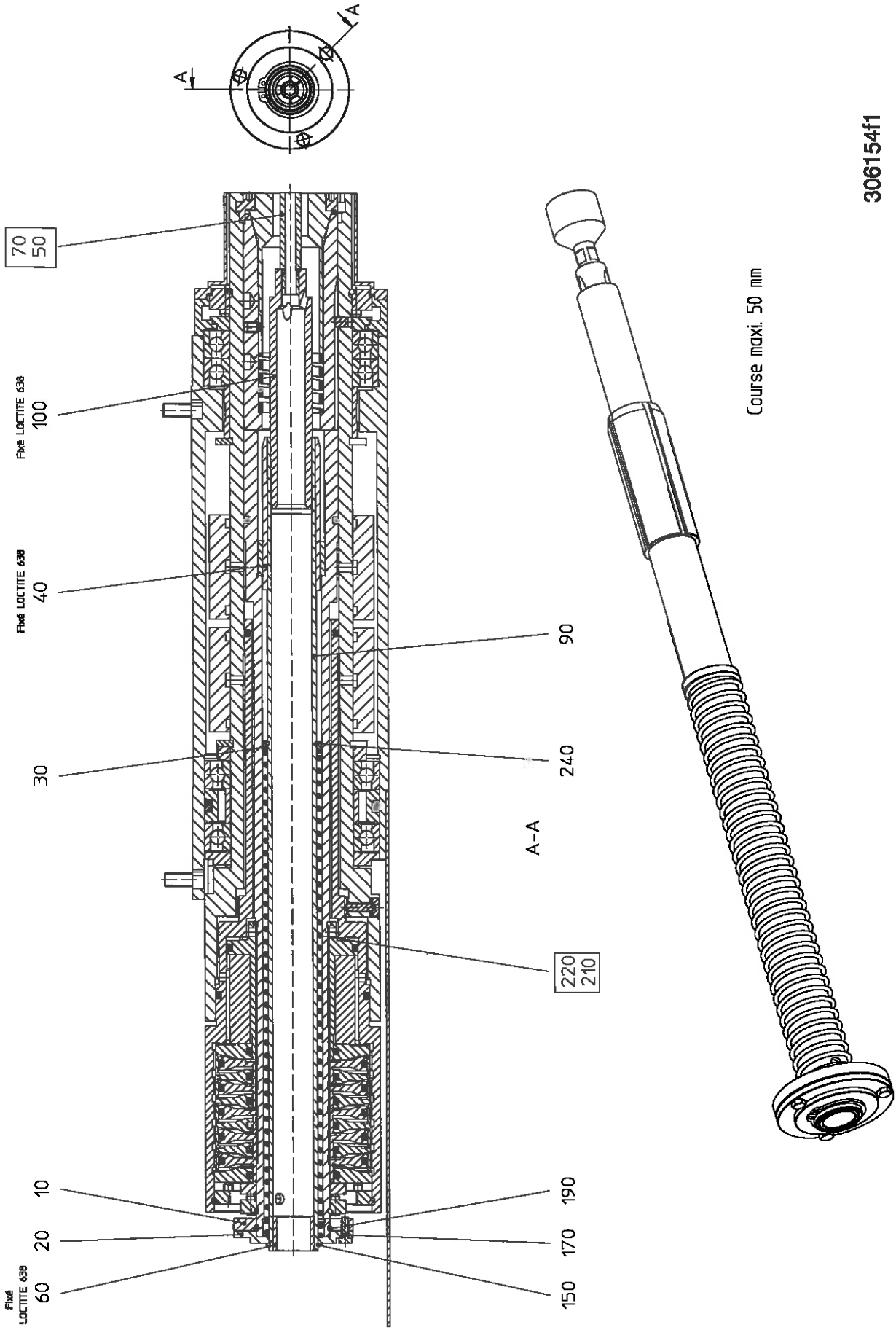

REMOVAL OF THE EJECTOR

Operations	Remarks
Lay down the left guard of the enclosure	
Unscrew the three head screws 170 with hexagonal exterior	
Remove ejector.....	.....manually by the back of the pickoff spindle
Lay down the stop ring 190 and the retaining flange 10.	

INSTALLATION OF THE EJECTOR

Operations	Remarks
Mount the retaining flange 10, then the stop ring 190.	On the back of the pickoff spindle
Introduce the ejector into the pickoff spindle	
Screw and tighten the three head screws 170 with hexagonal exterior	
Mount the left guard of the enclosure	

CHANGE OF THE ENDPIECE OF THE EJECTOR

TO START WITH : Pickoff spindle in rear position

Operations	Remarks
DISMOUNTING	
Dismount the ejector	as above
Dismount the endpiece	Flat key of 10 mm and pin ∅ 6 mm (hole at the back of the tube 90).
MOUNTING	
Screw the new endpiece	
Install the ejector	as above

SPARE PARTS

Item		Designation	Nbr.
50	562722	Endpiece diameter 12 mm	1
70	562733	Endpiece diameter 30 mm	1

CHANGE OF SPRING

TO START WITH: Pickoff spindle in rear position

Operations	Remarks
DISMOUNTING Lay down Seeger ring 150 and flange 20 Remove the spring	
MOUNTING Introduce the new spring Install flange 20 and Seeger ring 150	

SPARE PARTS

Item		Designation	Nbr.
210	217604	Spring 16 daN	1
220	217624	Spring 6 daN	1

TORNOS BECHLER

5.6 PICKOFF SPINDLE COLLET FLUSHING FOR DECO 26

- Machine: 199225

DECO 26

5.6.1 (306155) Pickoff Spindle Collet Flushing

With pickoff spindle 26 mm (306107)

DESCRIPTION

Device mounted in the interior of the pickoff spindle to allow the cleaning of the collet.

Mounting at the back of opposite spindle.

It can be used alone or with ejector 306154

It requires coolant pump 306150.

DESCRIPTION OF OPERATION

The oil gets from the pump to the connection 30 by a flexible tube diam.10 mm, length 6 m.

LOCATION OF COMPONENTS

20 Flange

30 Connection of cutting liquid supply

40 Endpiece

60 Guard

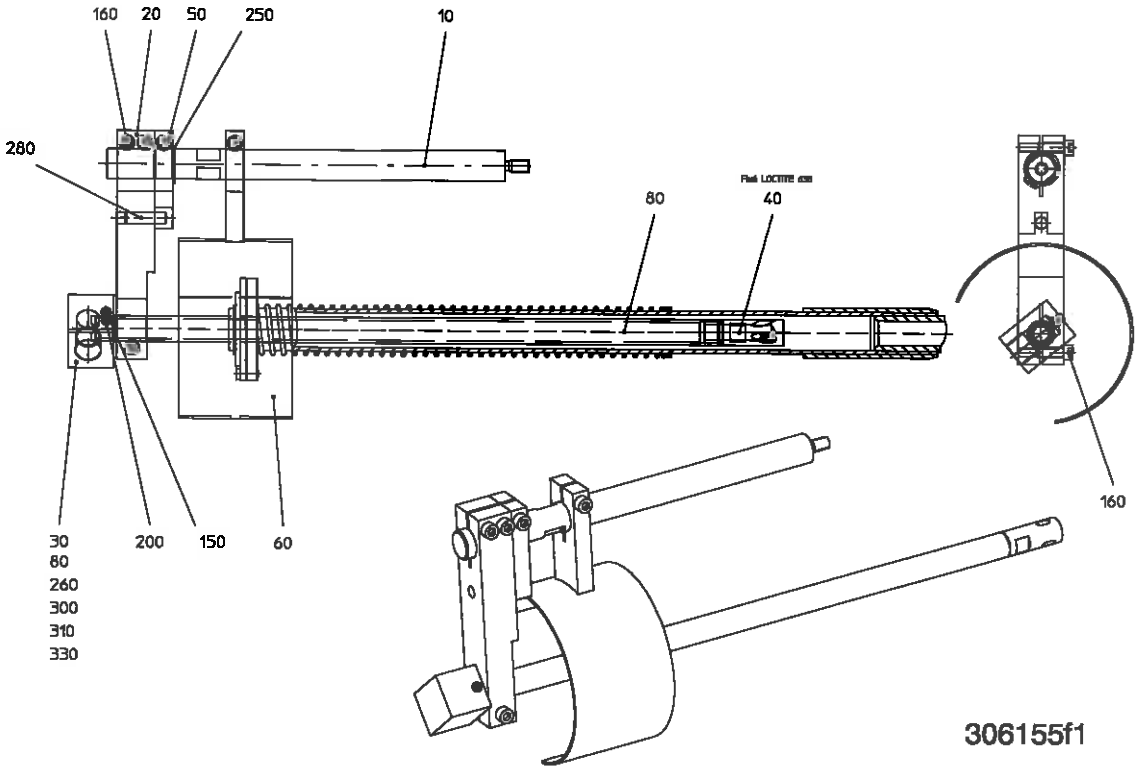

306155f1

REMOVAL OF DEVICE

TO START WITH: Pickoff spindle in rear position.
Coolant pump 306150 stopped.

Operations	Remarks
Lay down connection 80 with the tube	Unscrew screw 150
Lay down the tube with the flange	Unscrew the two screws 160.

INSTALLATION OF THE DEVICE

Operations	Remarks
	On the back of the pickoff spindle
Introduce the tube with the flange into the pickoff spindle.	Tighten the two screws 160
Install the connection 30	Tighten the screw 150

(306153) Cleaning pneumatics, see index

5.7 PICKOFF SPINDLE CROSS DRIVE

- On Machine: 199223 & 199225

DECO 20&26

5.7.1 (306036) S5-Spindle Cross Drive

Components :

040	Axis of toothed expanding roller	090	Belt guard
050	Expanding roller plate	220	Fastening screw
		350	Expanding roller screw

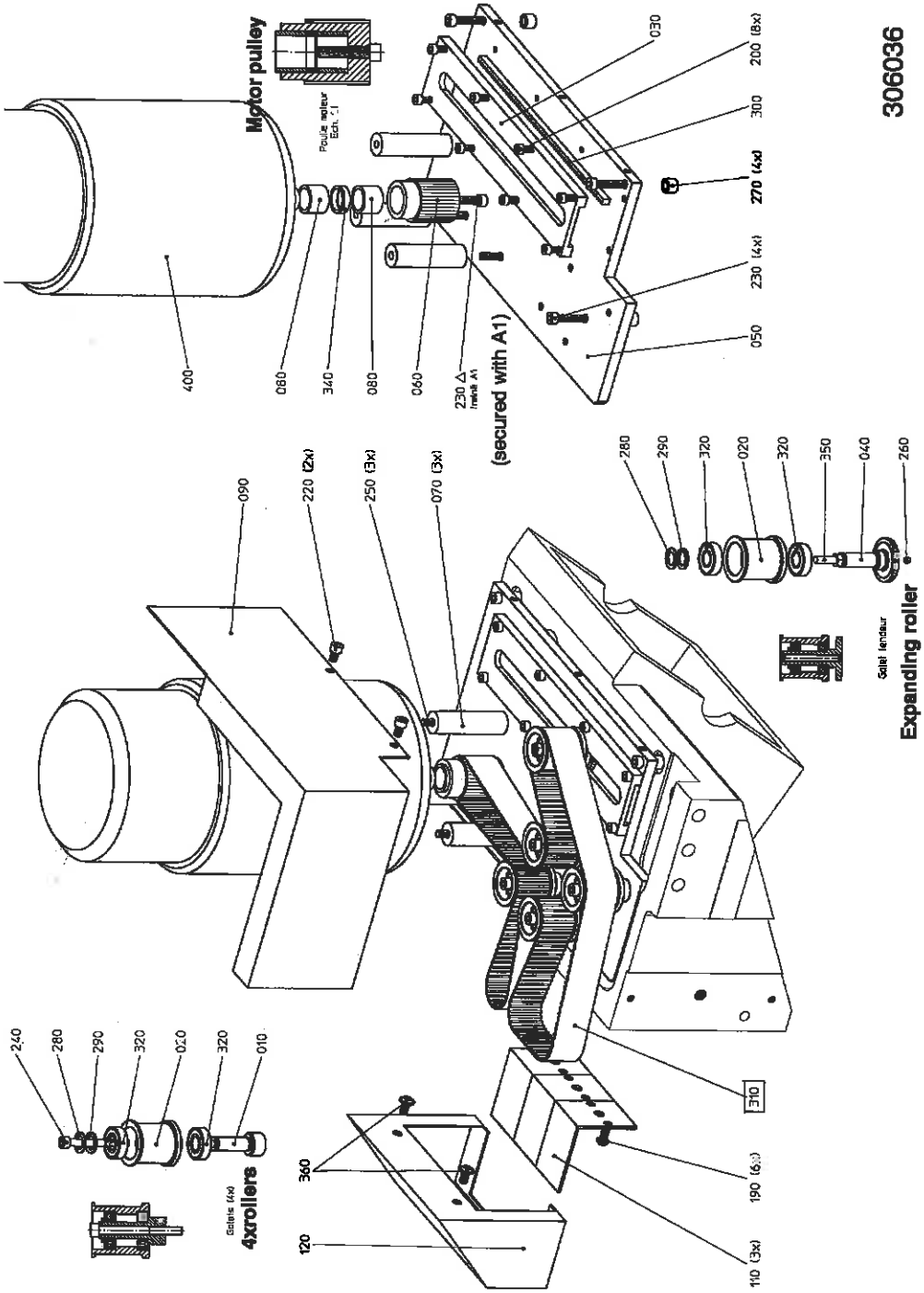

TORNOS BECHLER

S5-SPINDLE CROSS DRIVE BELT LAYOUT

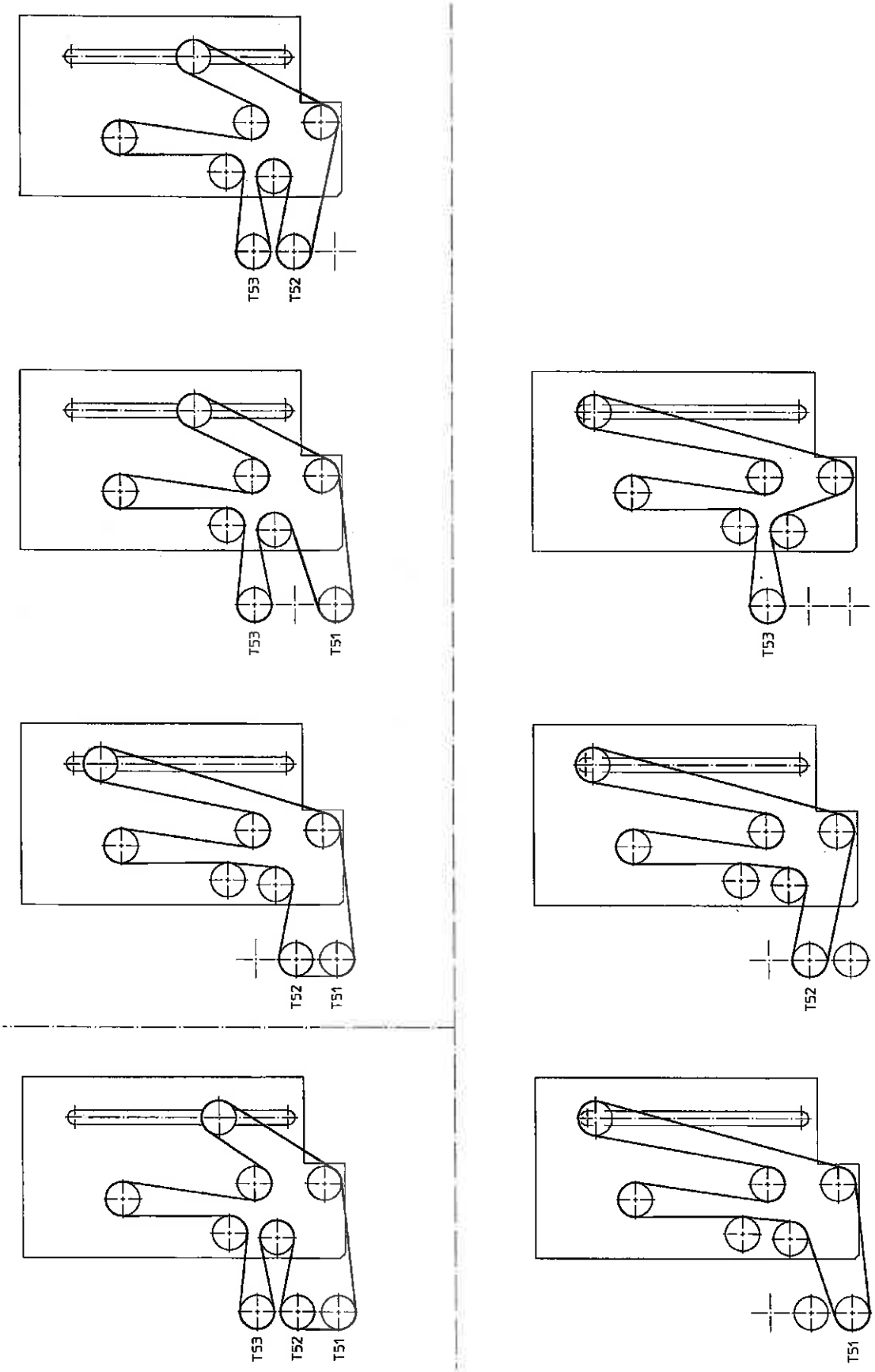

▲ **Caution !**
Do not admit the coolant unless the belt guard and protective shutters are in place. Otherwise the motor and roller bearings can be damaged / destroyed.

DATA

S5-SPINDLE CROSS DRIVE DATA

• No. tools :		1 to 3	
• Tool mounting positions :		T51 to T53	
• Speed :		0 - 8000 rpm	
• Motor - spindle ratio :		1	
		P_{nom}	P_{max}
• Motor ..... :	0 - 8000 rpm	1.50 kW	2.25 kW
• Spindle torque at :	0 - 3000 rpm	4.80 Nm	
	8000 rpm	1.79 Nm	
• Acceleration time :	0 - 8000 rpm	0.54 s * to	

* *Final characteristics depend on live units and tooling.*

S5-SPINDLE SPEED vs. CROSS DRIVE TORQUE / ACCELERATION TIME

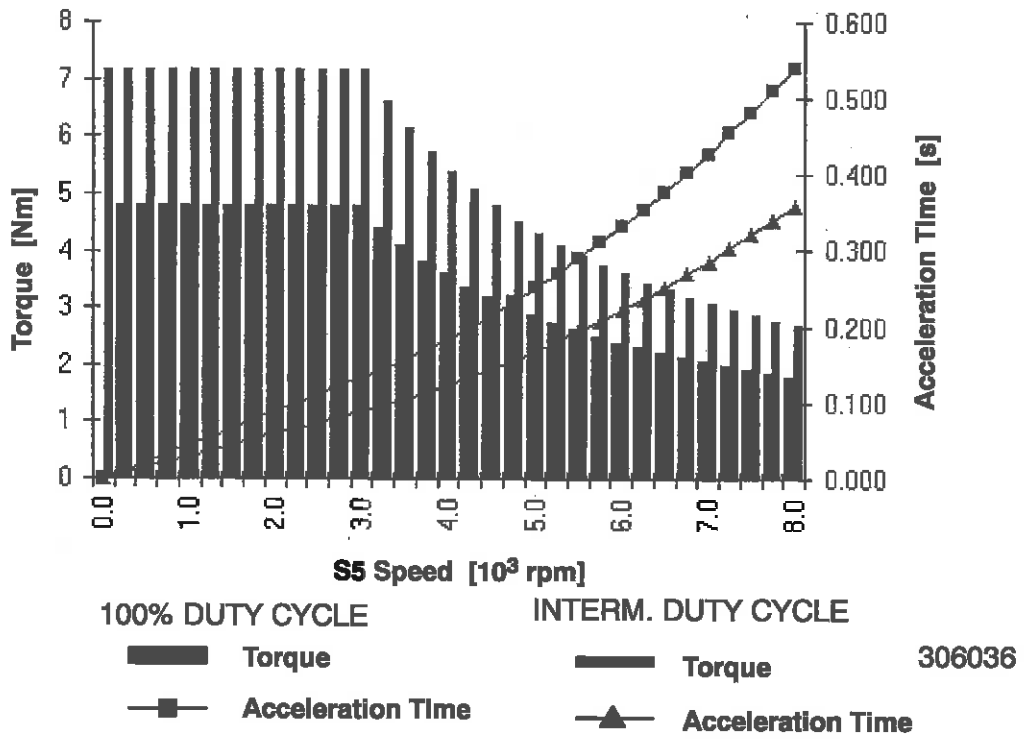

S5-SPINDLE CROSS DRIVE OPERATION

- Application : live tools for cross backworking such as drilling, , milling, etc.
- Type : asynchronous
- Transmission : over timing belt on toothed wheels without backlash
- Belt tensioning : with a single expanding roller

CHANGE

S5-DRIVEN / FIXED CROSS TOOLHOLDER CHANGE **To start with :** Put the machine in SETTING mode.	
What to do ?	How ? What for ? Notes
Dismounting	
• Take down Belt Guard 090 ...	... by unscrewing two Screws 330.
• Shift the expanding roller to relax the belt ...	... but first loosen Expanding Roller Screw 350 and unscrew Axis 040.
• Unscrew the fastening screws of the toolholder.	
• Remove the S5-driven toolholder.	
Mounting	
• Fit a fixed toolholder ...	... set in place by the two locating pins.
• Screw in and tighten its fastening screws.	
• Fit the belt on the drive pulleys.	See S5-Spindle Crosss Drive Belt Layout, earlier in this para.
• Tension the belt ...	... by shifting the toothed expanding roller, see your Instructions 300401, Para. 2.2.4.
• Open / close the protective shutters ...	... acc. to live / fixed tool change.
• Mount and fasten Belt Guard 110 ...	... with two Fastening Screws 330.
• Adjust and lock the protective shutters.	

SPARE PARTS

Item		Designation	No.
310	216951	Syncroflex Belt 32/T5/1315	1

5.7.2 (306099) S5-Spindle Axial Drive

- On Machine 199223 & 199225 DECO 20&26

Option required : S5-Spindle Cross Drive (306036), see para. above, which is connected to its speed override.

Components :

040 Axis of toothed expanding roller

090 Expanding roller plate

190 Belt guard

410 Fastening screw

470 Expanding roller screw

S5-SPINDLE AXIAL DRIVE OPERATION

- Application : live tools for axial backworking such as drilling, , milling, etc.
- Type : asynchronous
- Transmission : over timing belt on toothed wheels without backlash
- Belt tensioning : with a single expanding roller

⚠ **Caution !**
Do not operate the drive unit without guards.

TORNOS BECHLER

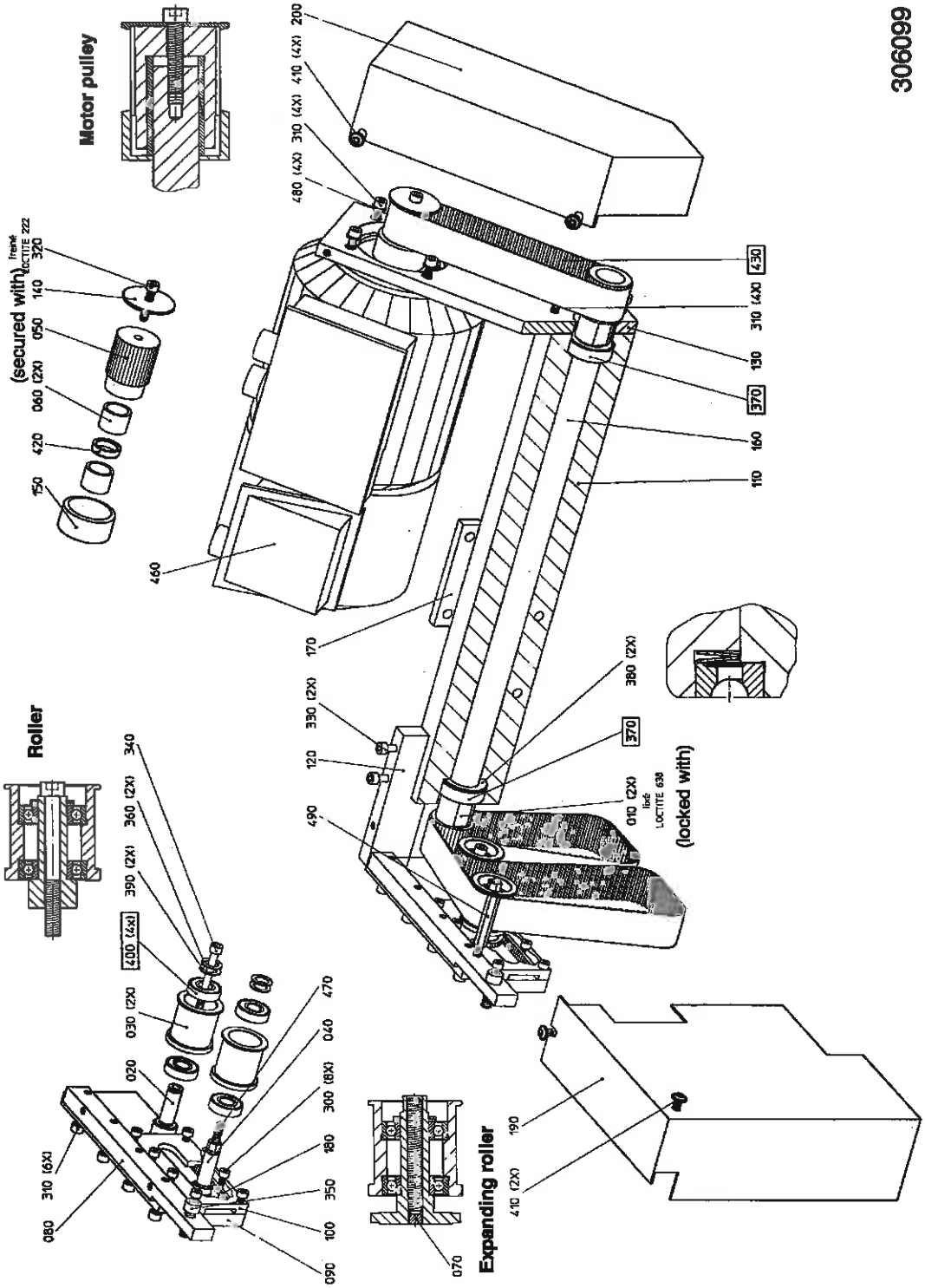

TORNOS BECHLER

S5-SPINDLE AXIAL DRIVE BELT LAYOUT

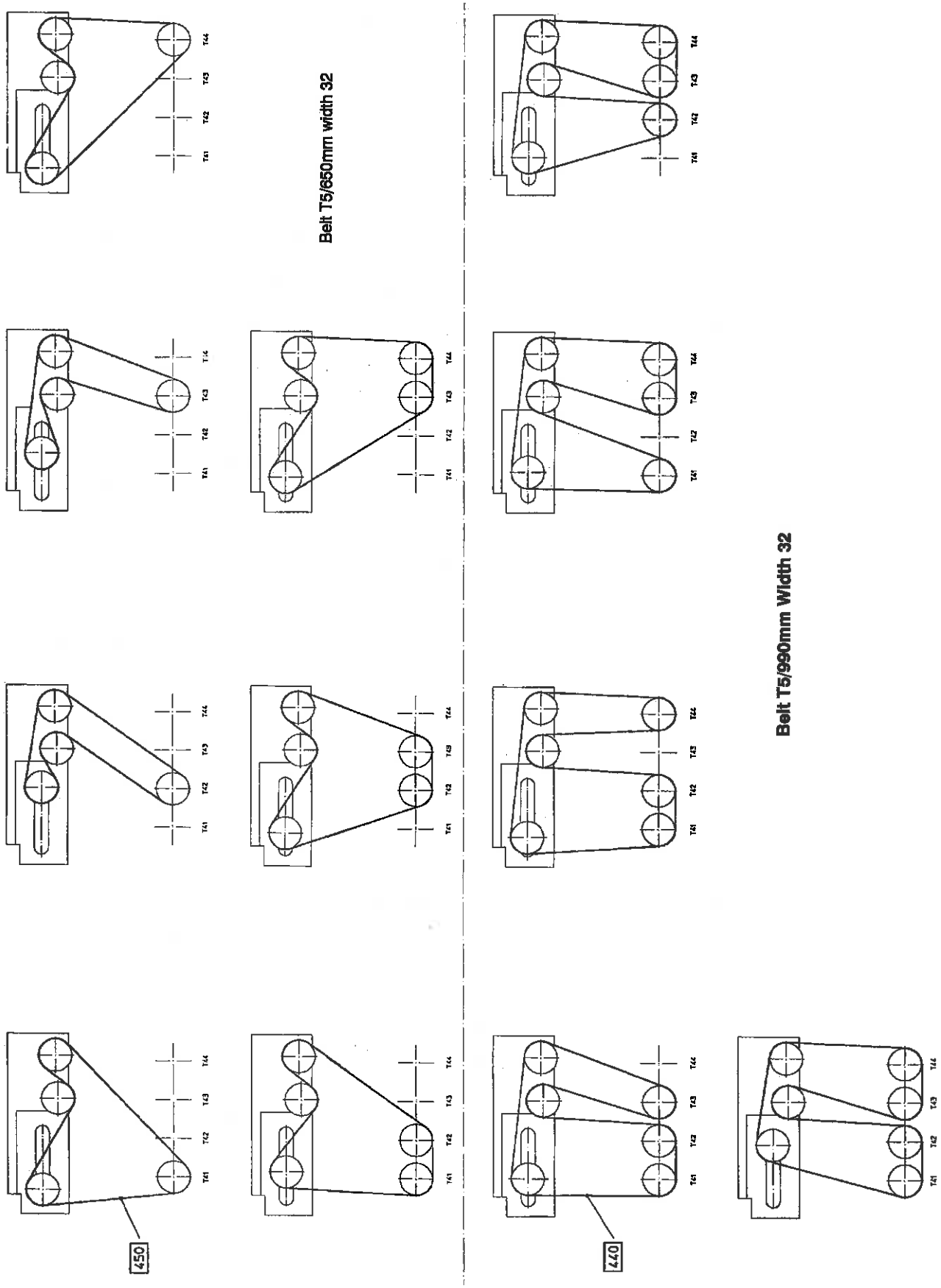

DATA

S5-SPINDLE AXIAL DRIVE DATA

• No. tools :		1 to 4	
• Tool mounting positions :		T41 to T44	
• Speed :		0 - 8000 rpm	
• Motor - spindle ratio :		1	
		P_{nom}	P_{max}
• Motor ..... :	0 - 8000 rpm	1.50 kW	2.25 kW
• Spindle torque at :	0 - 3000 rpm	4.80 Nm	
	8000 rpm	1.79 Nm	
• Acceleration time :	0 - 8000 rpm	0.54 s * to	

* *Final characteristics depend on live units and tooling.*

S5-SPINDLE SPEED vs. AXIAL DRIVE TORQUE / ACCELERATION TIME

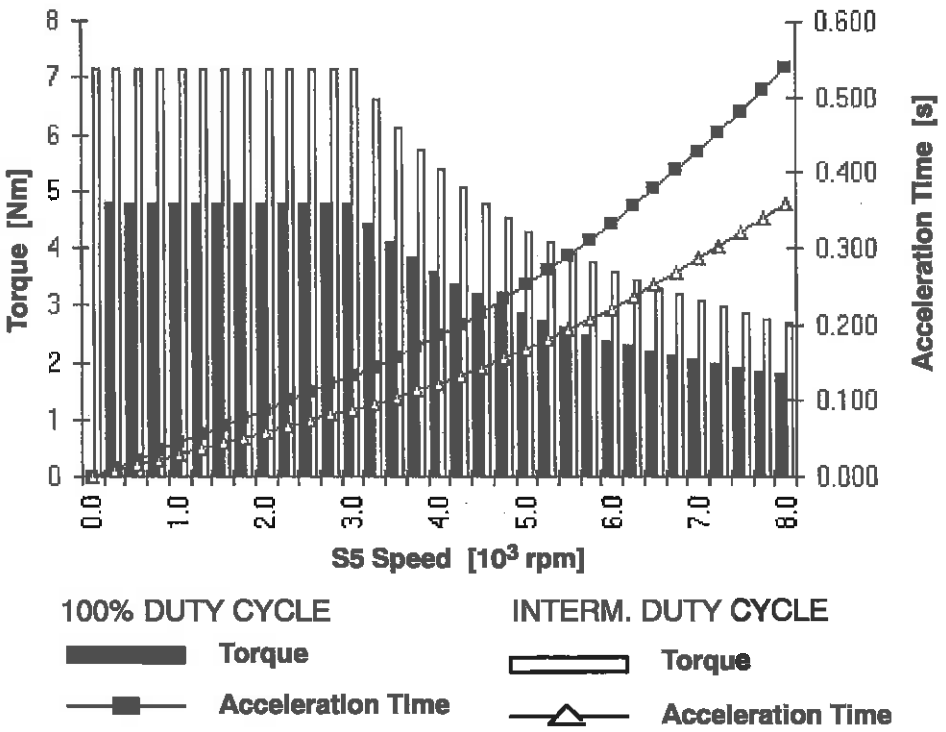

CHANGE

TOOLHOLDER CHANGE	
To start with : Put the machine in SETTING mode.	
What to do ?	How ? What for ? Notes
Dismounting	
• Take down Belt Guard 190 ...	... by unscrewing two Screws 410.
• Shift the expanding roller to relax the belt ...	... but first loosen Expanding Roller Screw 470 and unscrew Axis 040.
• Unscrew the fastening screws of the toolholder.	
• Remove the toolholder.	
Mounting	
• Fit another toolholder ...	... set in place by the two locating pins.
• Screw in and tighten its fastening screws.	
• Fit the belt on the drive pulleys.	See S5-Spindle Axial Drive Belt Layout, earlier in this para.
• Tension the belt ...	... by shifting the toothed expanding roller, see your Instructions 300401, Para. 2.2.4.
• Mount and fasten Belt Guard 190 ...	... with two Fastening Screws 410.

SPARE PARTS

Item		Designation	No.
370	201250	Grooved ball bearing 6203-2RZ	2
400	216954	Grooved ball bearing 6001-2RZ	4
430	217232	Syncroflex Belt 32/T5/480	1
440	217233	Syncroflex Belt 32/T5/990	1
450	217234	Syncroflex Belt 32/T5/650	1

5.8 LONG-PART DISPOSAL

This system evacuates long parts of maximum 600 mm length from the pickoff spindle.

5.8.1 (306072) Long-Part Ejector For DECO 20

- On Machine: 199223

DECO 20

Versions 0003 and 0004 of DECO 20 accommodate the system in combined Positions T41 and T42.

Components :

080 Thrustor mounting block

090 Thrustor bracket

110 Bracket with 10mm-∅ hole

120 10mm-∅ ejection rod

130 Guiding steady

140 6mm-∅ ejection rod

350 Thrustor

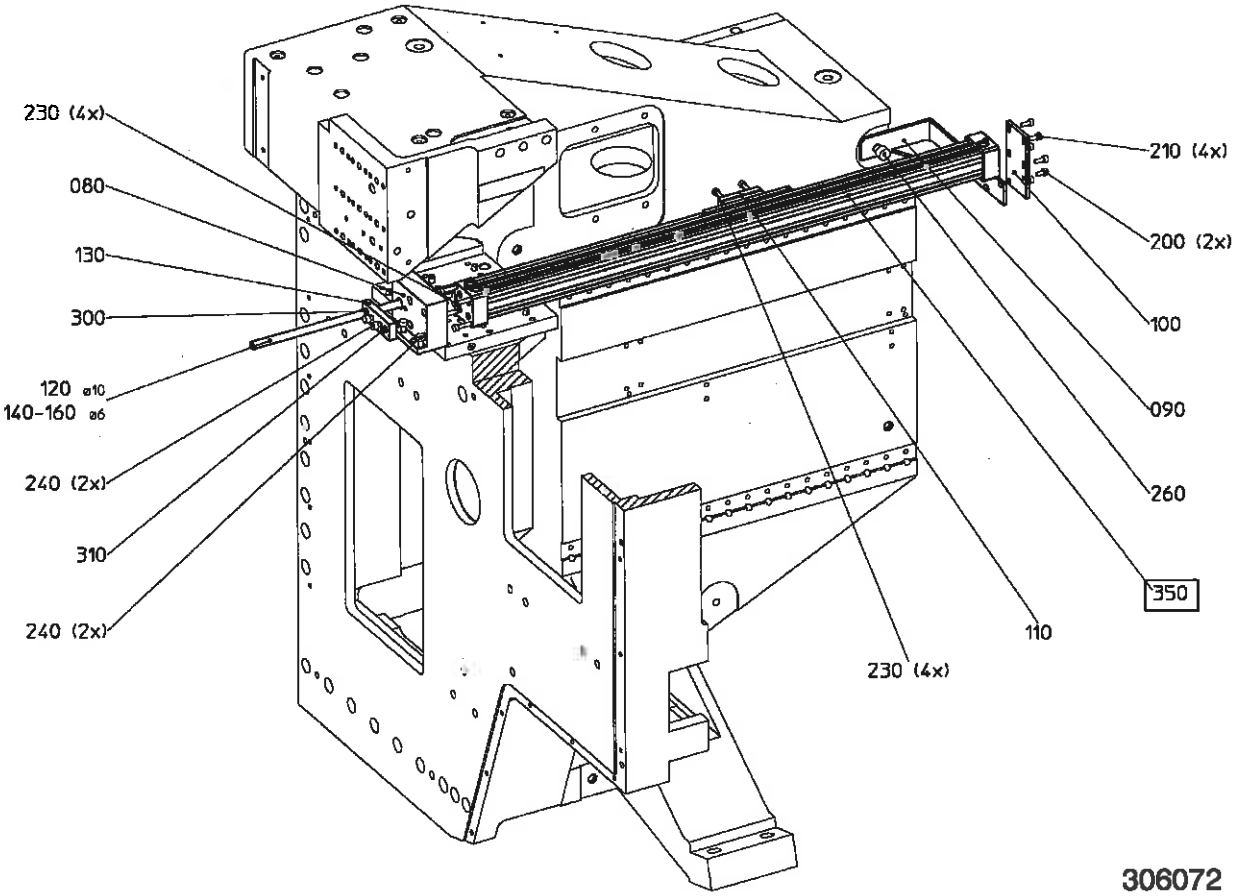

306072

DATA

DECO 20 LONG-PART EJECTOR DATA [mm]		
		TB Ident. No.
• Thrustor stroke :	600	
Ejection rods :		
• Ejection rod OD / ID :	10 / 4	562289
• Ejection rod OD / ID :	6 / 3	562320

LONG-PART EJECTOR OPERATION

- Ejection rod function : pushing a part out of pickoff spindle from T41
- Guiding steady function : accommodating 6 and 10mm-∅ ejection rods
- Air / oil supply : over appropriate endpiece on pipe-like ejection rods
- See also : DECO 20 Long-Part Equipment (306120), i.e. thrust tubes for pickoff spindle, Para. 5.4.6.

MOUNT

MOUNTING DECO 20 LONG-PART EJECTOR

To start with : Make Positions T41 and T42 free for ejector.

Install pneumatics and connect electrics, see Long-Part Disposal Pneumatics, Para. 5.4.5.

What to do ?	How ? What for ? Notes
Mounting	
• Get the preassembled unit ready:	in T41 and T42.
• Fasten the unit with two Screws 240.	
• Fix Bracket 090 to the frame ...	with Screw 260: M10 x 20
• Align Thrustor 350 with Plate 100 and join them with four Screws 210:	M5 x 12
• Connect the air pipes.	See the control diagram and operation in Para. 5.4.5.
• Adjust the advance / return rates of the thrustor.	Ditto.

CHANGE

EJECTION ROD CHANGE for DECO 20 Long-Part Ejector	
What to do ?	How ? What for ? Notes
Dismounting • Loosen two Screws 230: • Pull the ejection rod through the pickoff spindle. • Pivot Guiding Steady 130.	 M5 x 20
Mounting • Fit in another ejection rod ... **Adjustments** • Align the end of the ejection rod with the tool line ... • Tighten two Screws 230:	 ... of required capacity. ... unless an appropriate endpiece is there. M5 x 20

SPARE PARTS

Item		Designation	No.
350	216595	Pneumatic thrustor D25 M/46025/600	1

TORNOS BECHLER

5.8.2 (306138) Long-Part Ejector For DECO 26

- On Machine: 199225

DECO 26

DECO 26 accommodates the system in combined Positions T41 and T42, see also Long-Part Ejector (306072) in the preceding para.

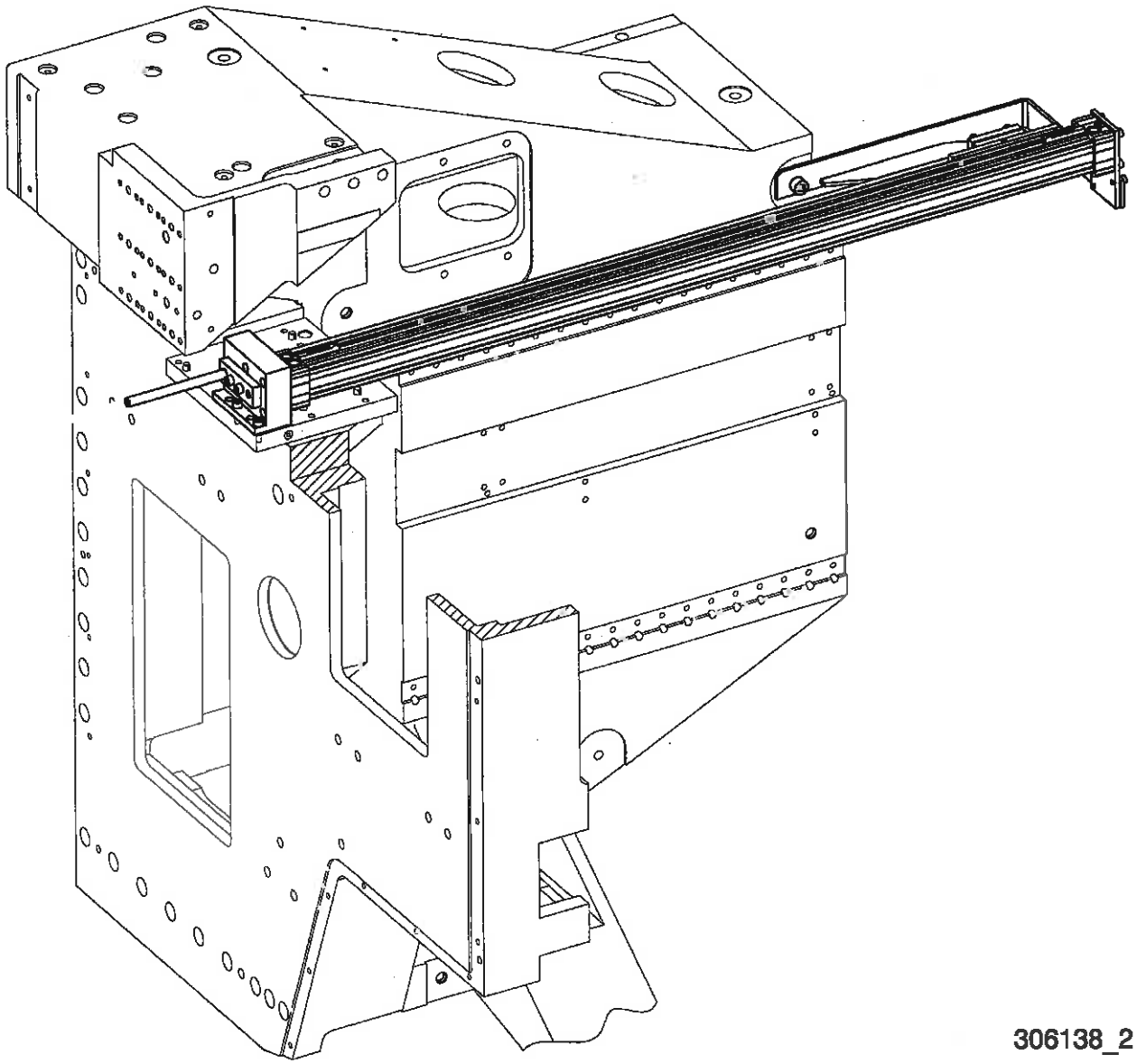

306138_2

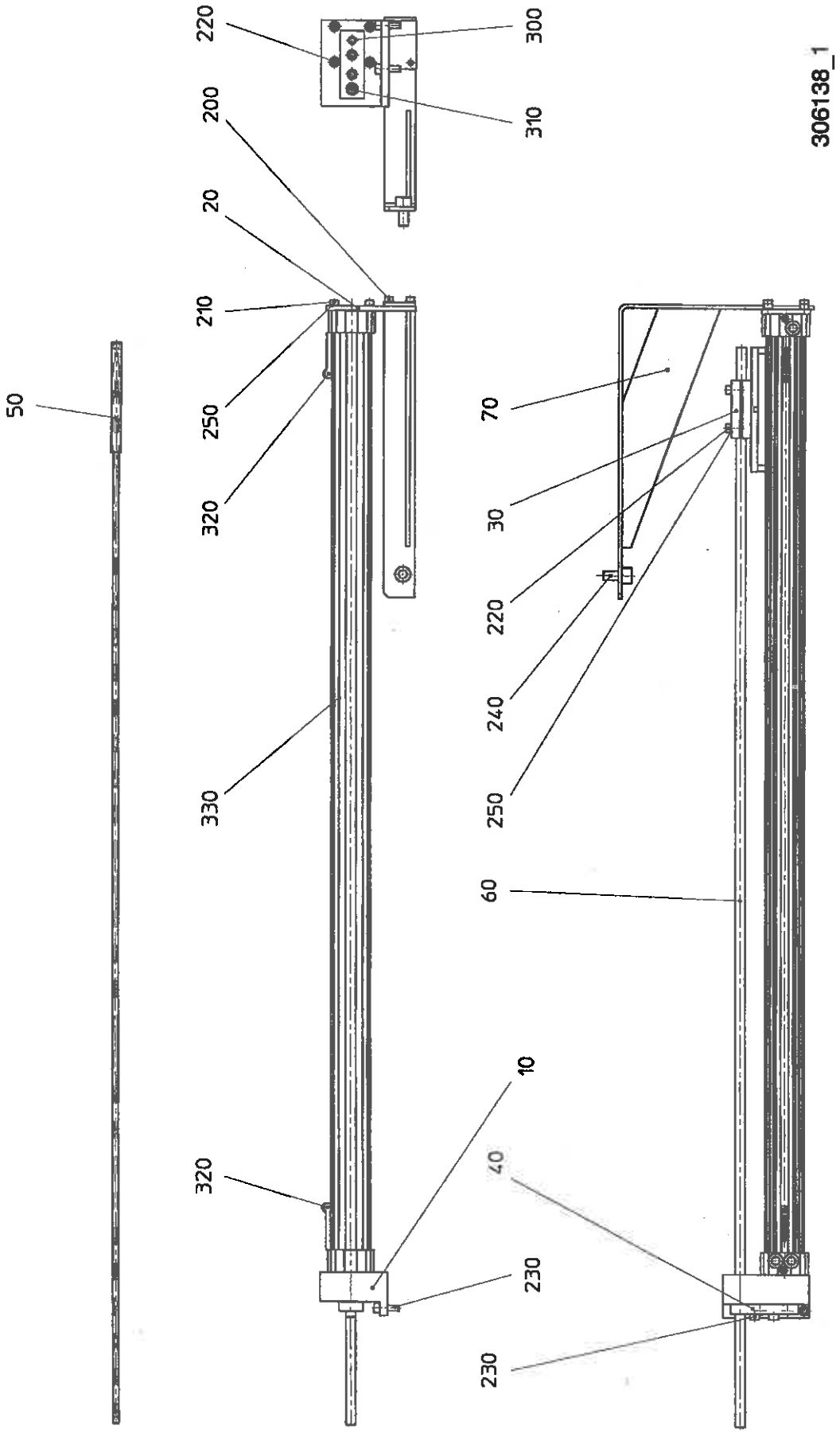
220
300
200
310
20
210
50
250
320
70
30
220
240
330
250
60
10
320
40
230
230
306138_1

5.8.3 (306073) Long-Part Catcher

- On Machines: 199223 & 199225

DECO 20&26

Components :

050 Tipper
450 Tipping thrustor
480 Selection thrustor

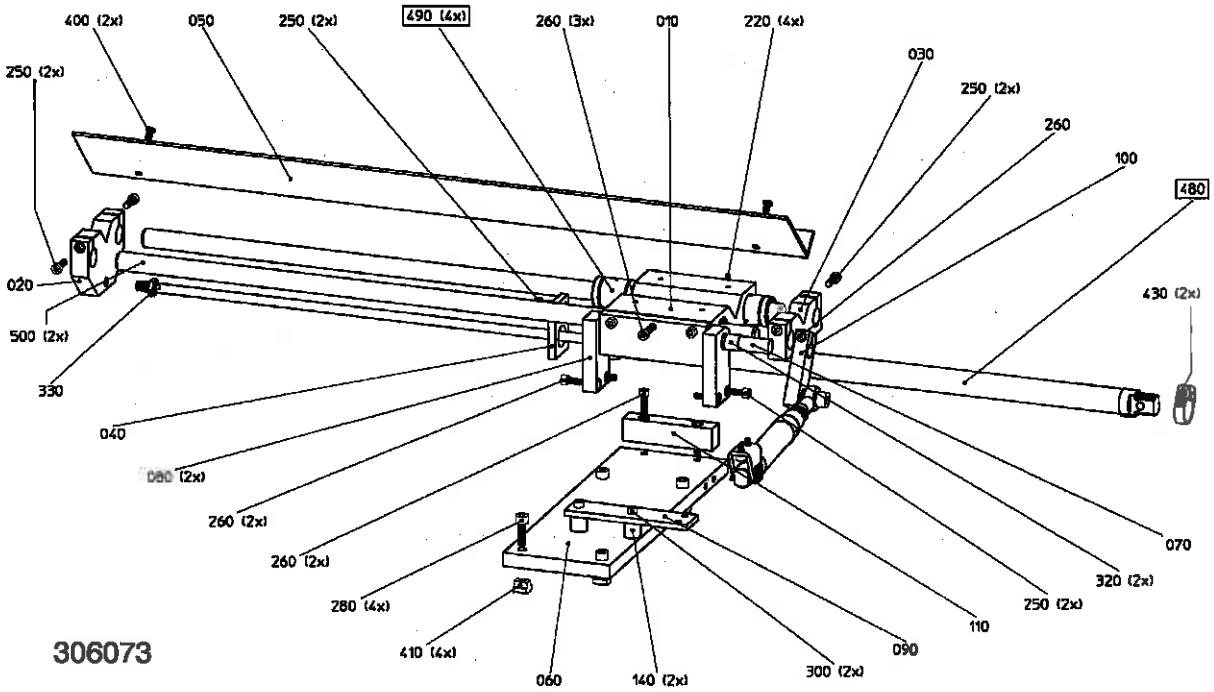

306073

EQUIPMENT

ASSOCIATED EQUIPMENT To be selected as and when required.		
Item		**Designation**
–	306072	Long-Part Ejector **DECO 20**
–	306138	Long-Part Ejector **DECO 26**
–	306157	Long-Part Catcher Stand
–	306076	Long-Part Disposal Pneumatics
–	306120	DECO 20 Long-Part Equipment
–	306xxx	DECO 26 Long-Part Equipment
–	306084	Bar Support Claws

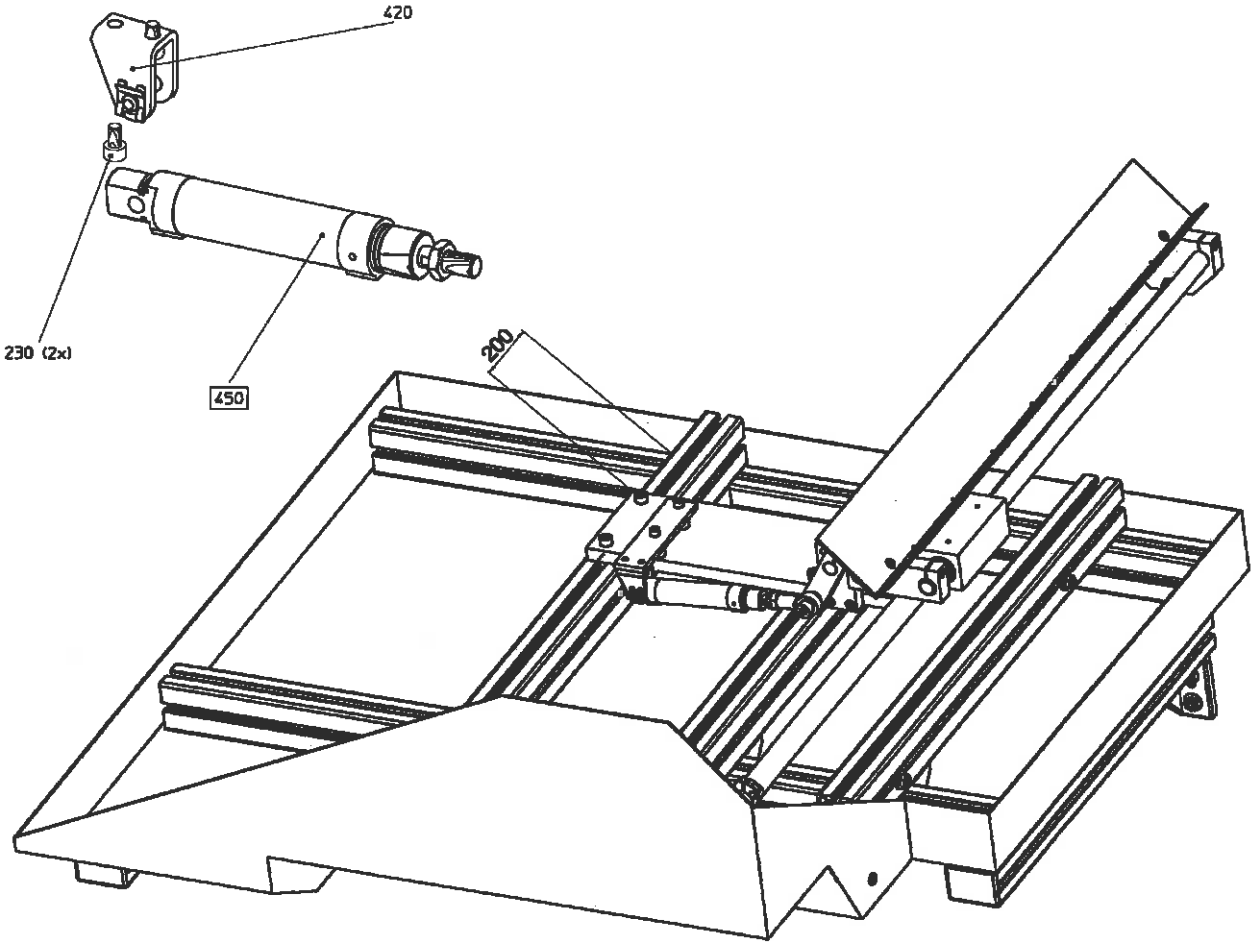

306073

DATA

LONG-PART CATCHER DATA [mm]		
• Tipper thrustor stroke :	500	
	DECO 20 :	**DECO 26 :**
• Part diameter :	7 to 25.4	7 to 32
• Part length :	112 to 600	112 to 600
• Part back length, max.:	100	100
• For details of equipment	(306072) (306157) (306120)	(306072) (306157) (306136)

LONG-PART CATCHER OPERATION

- Motion control : by pneumatic thrustors
- Selection thrustor control : over two sensors
- Long-part catching : in a V-shaped tipper behind pickoff spindle
- Long-part tipper operation : The tipper retracts from the machine and tips the part onto Ramp 030, see Catcher Stand (306157).

SPARE PARTS

Item		Designation	No.
450	216711	Double-acting cylinder (ISO 6432) FESTO DSNU-25-50-PPV-A	1
480	217109	Double-acting cylinder (ISO 6432) FESTO DSNU-25-500-PPV-A	1
490	217110	Closed-ring sleeve 20 mm diam. HYDREL PAB 2045 PP AS	1

TORNOS BECHLER

306073

LONG-PART DISPOSAL KINEMATICS

Ejector & Catcher

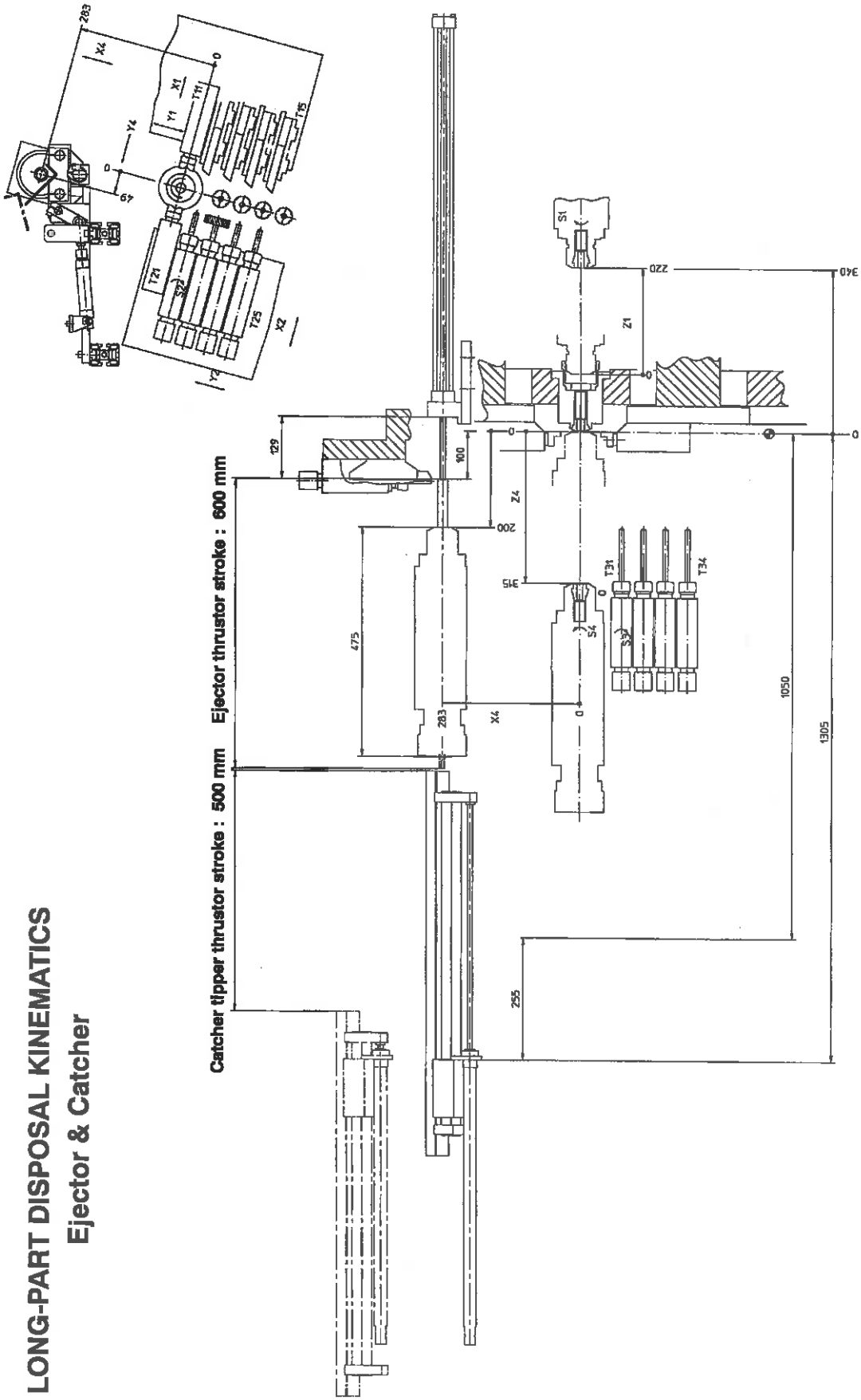

5.8.4 (306074) Long-Part Catcher Stand

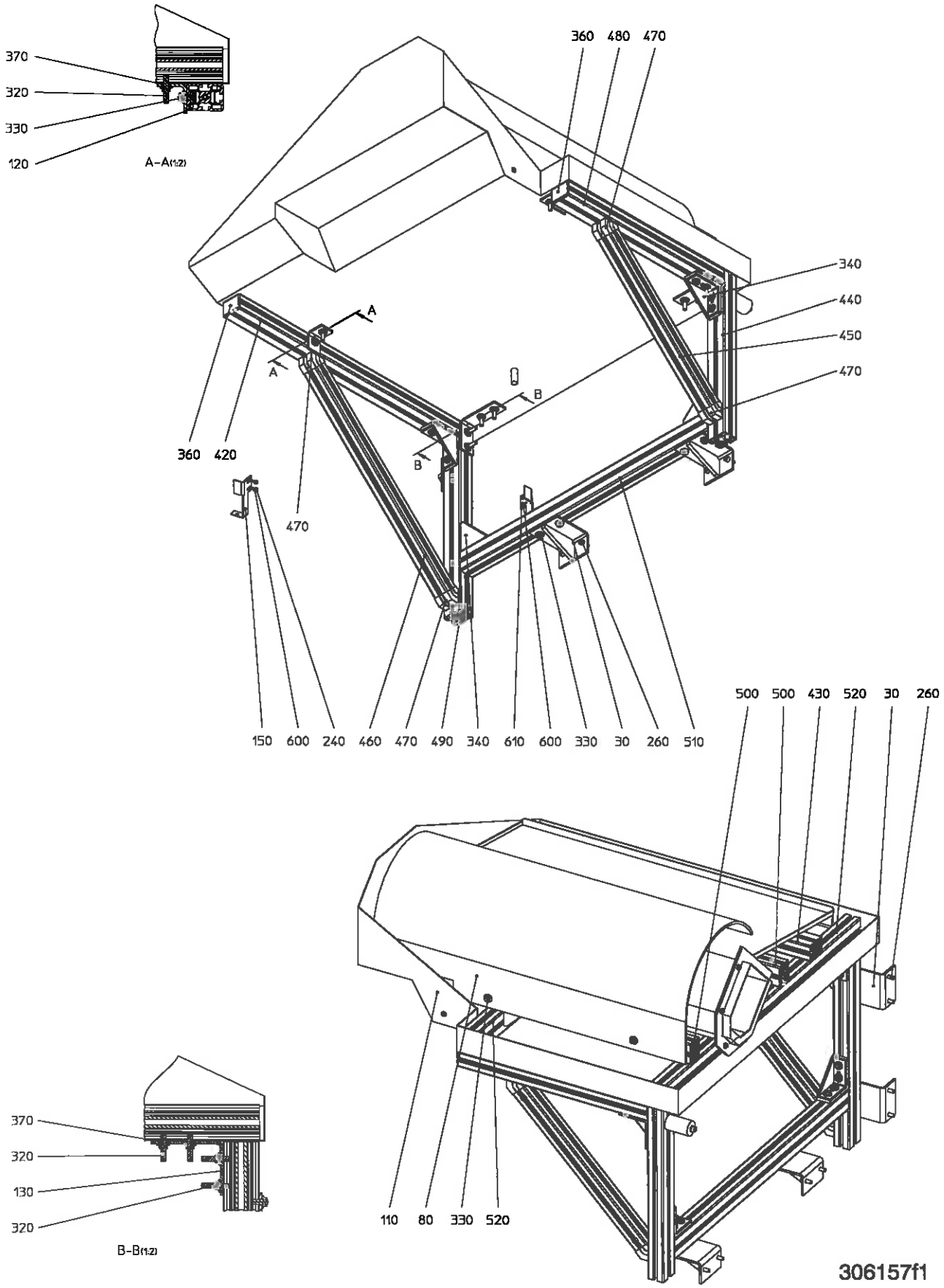

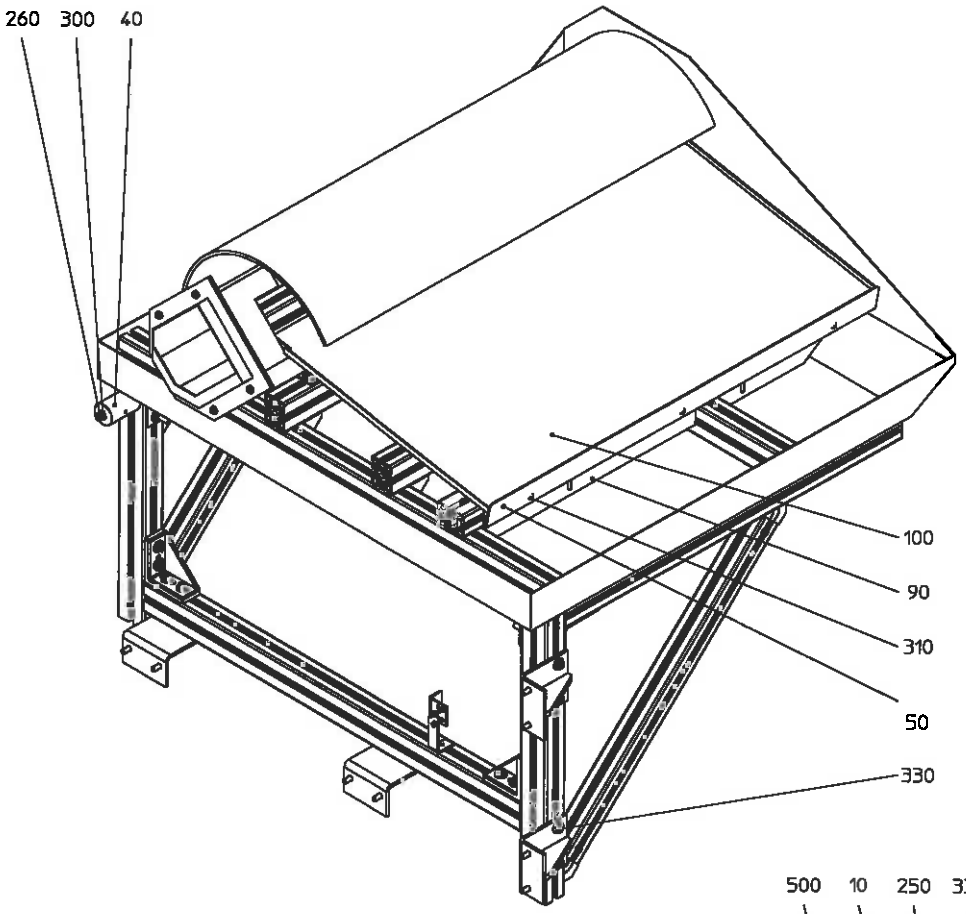
260
300
40
100
90
310
50
330

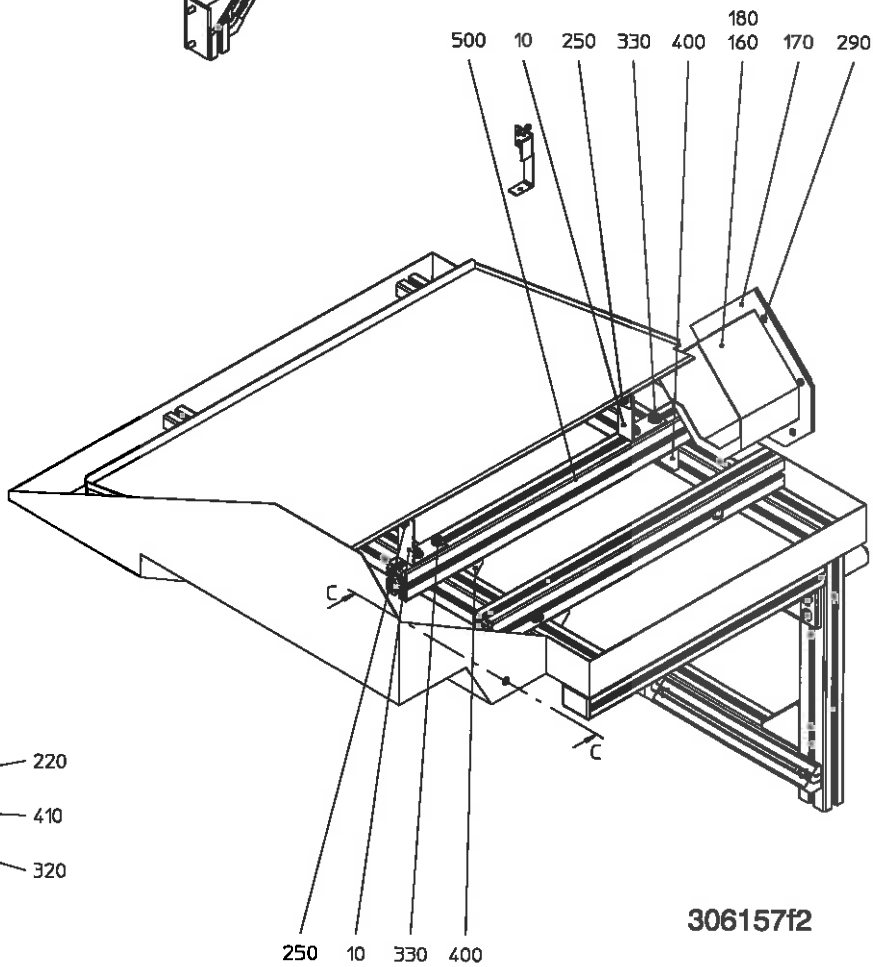
500
10
250
330
400
180
160
170
290
C
C
250
10
330
400

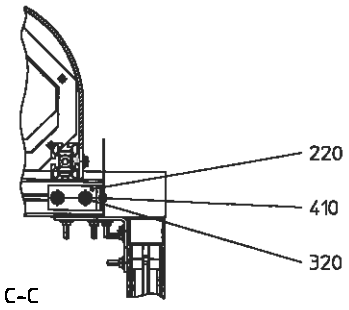
220
410
320
C-C

306157f2

- On Machines: 199223 & 199225

DECO 20&26

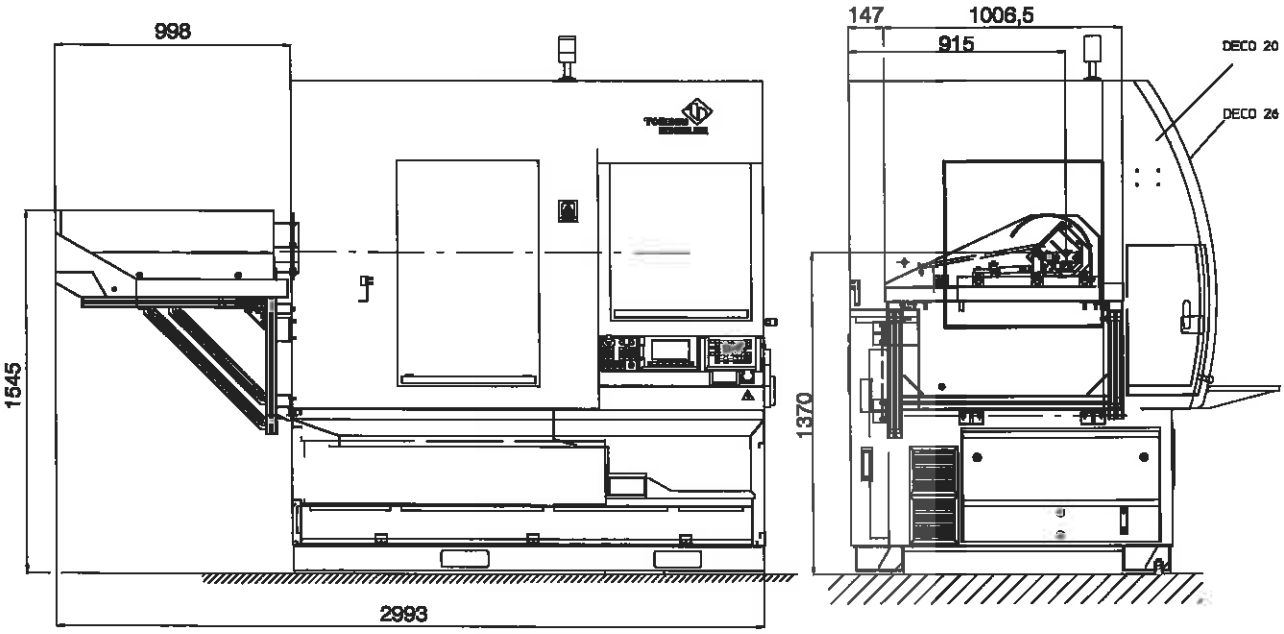

LONG-PART CATCHER & STAND FLOOR PLAN

DESCRIPTION AND DATA

LONG-PART CATCHER STAND DESCRIPTION & DATA

[mm]

• Construction :	profiled aluminium
• Location :	off machine perimeter, LH side
• Function :	supporting Catcher (306073), see Para. 5.4.3, and further part disposal over Disposal Ramp 030
• Preparation / installation :	recommended ex works
Overall dimensions :	998
Length :	1006,5 (starting at 147 mm from the back side of machine)
Height :	1545
Disposal ramp :	
• Length, approx. :	800
• Width :	800 (i.e. the maximum limit for part length)

TORNOS BECHLER

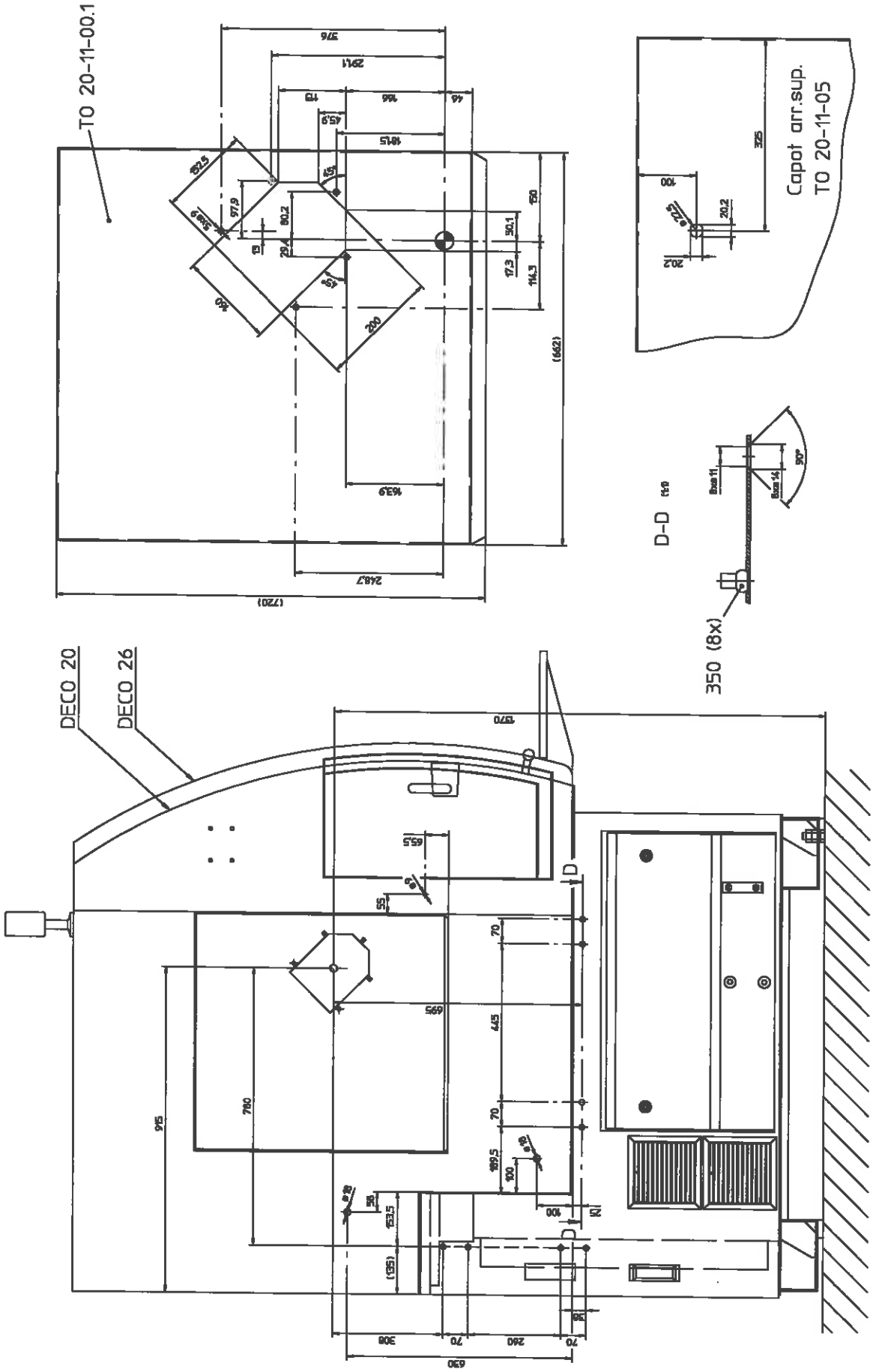

306157f3

ELECTRICAL CONNECTION: See electrical diagram **933 E 0001**

Application of micro safety switch rear guard

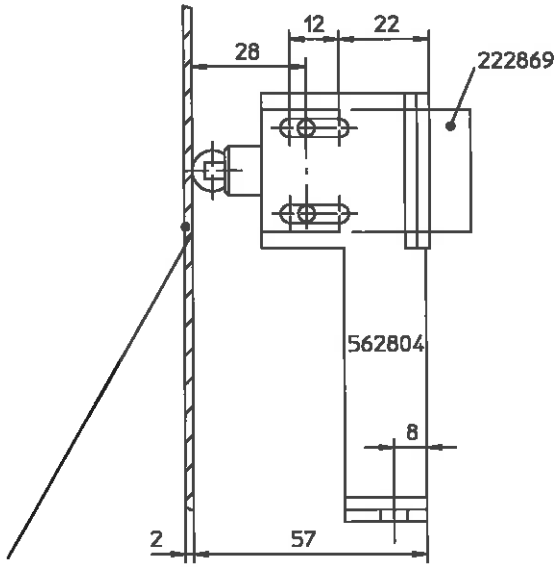

External guard

Rear guard

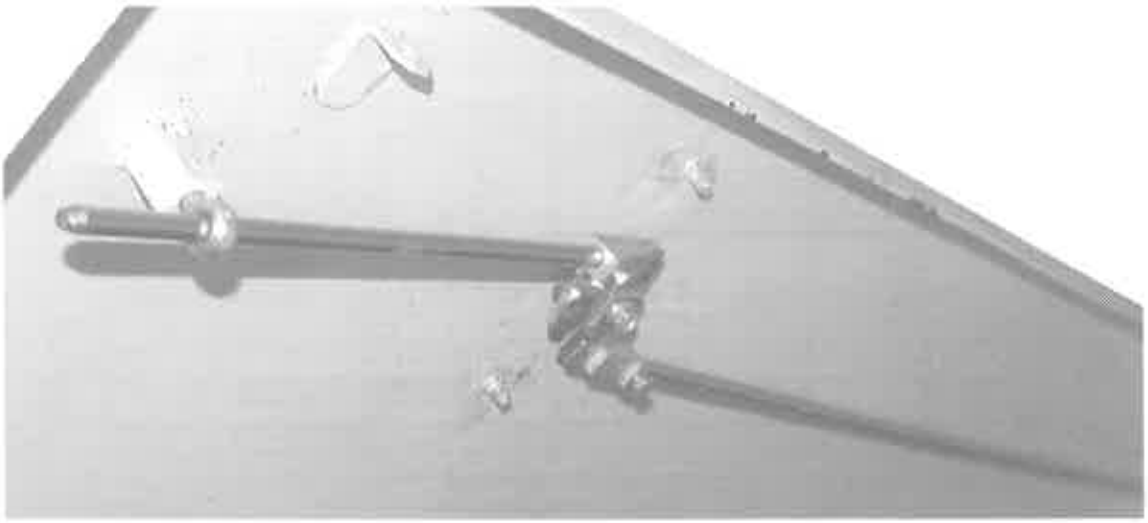

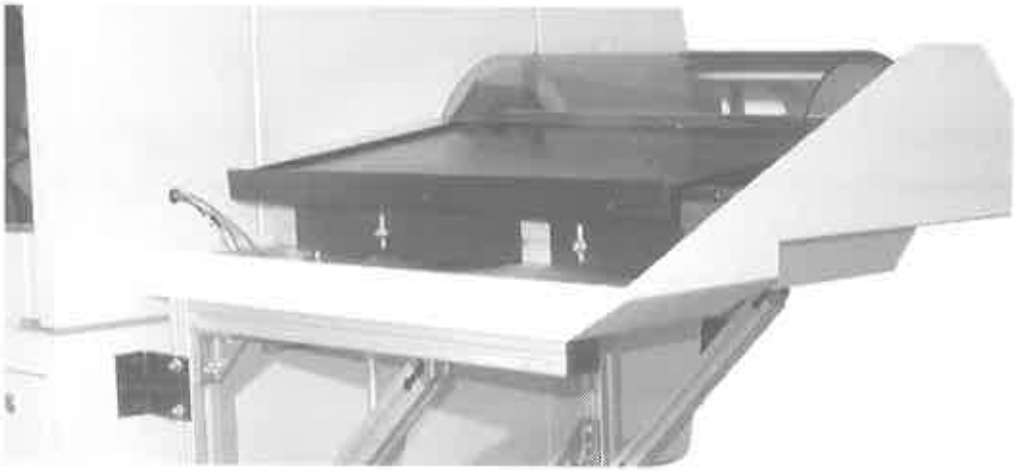

DISMOUNTING / TRANSPORT / MOUNTING of Long-Part Catcher with Its Stand	
To start with : Catcher (306073) and its Stand (306074) to form an assembly.	
Dismounting	
• Disconnect the pneumatic thrustors:	i.e. four air pipes and 4 sensor cables and 1 pin.
• Disconnect the single leg ...	... to lay it down.
• Support the assembly.	
• Undo completely the screws fastening the stand to the machine ...	... and remove the assembly.
Transport	
• Pack the assembly separately :	as shown, see Fig. opposite.
Mounting	
• Position the assembly and support it.	Position against LH-side of machine.
• Fix the assembly to the machine.	
• Fit and fix the leg.	
• Connect the thrustors and sensors.	
Recommended preparation/installation :	ex works

5.8.5 (306076) Long-Part Disposal Pneumatics

- On Machines: 199223 & 199225

DECO 20&25

Components :

010 Electrovalve

050 Air supply regulators

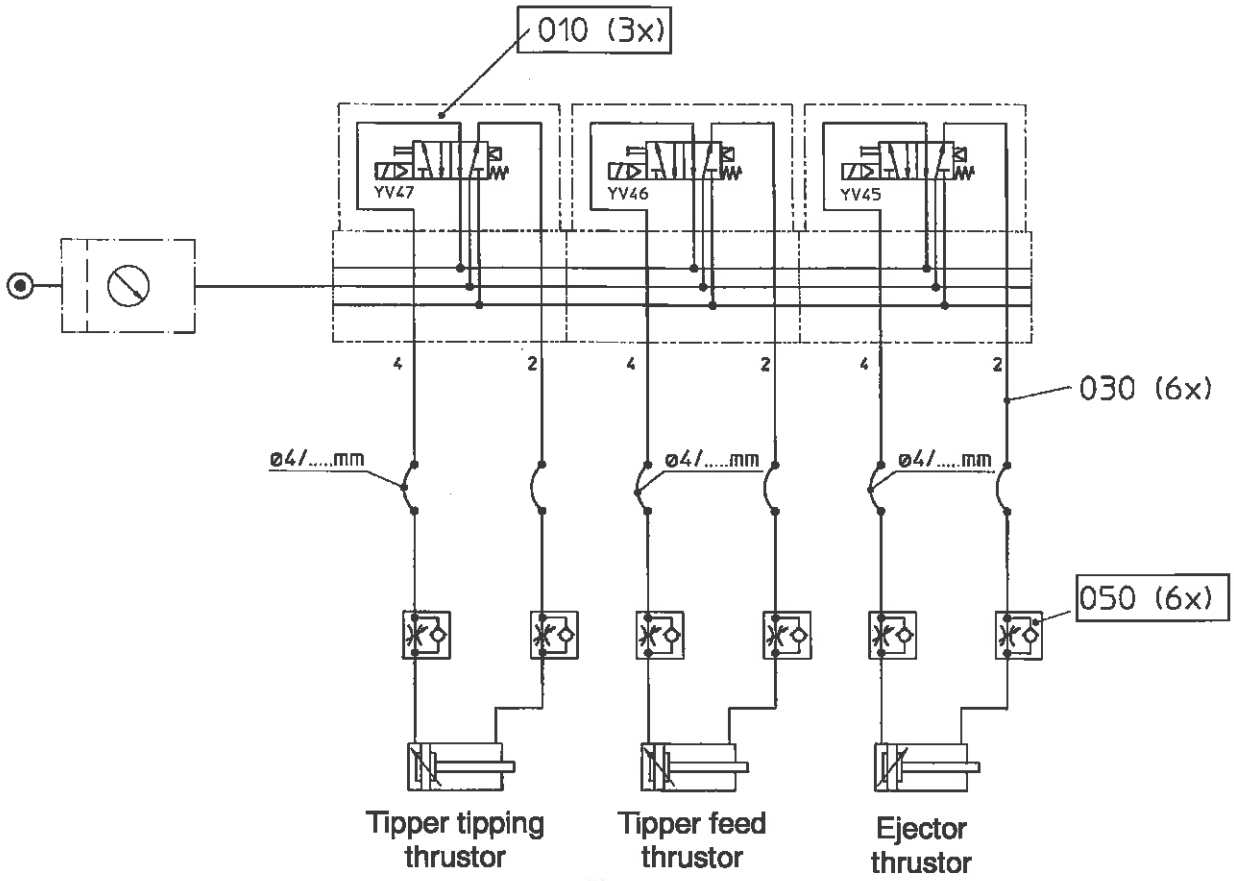

LONG-PART DISPOSAL PNEUMATICS OPERATION

- The electrovalves control the following thrustors :

Ejector thrustor :	see Fig. in Para. 5.4.1 (306072)
Tipper feed thrustor :	see Fig. in Para. 5.4.3 (306073)
Tipper tipping thrustor :	see Fig. in Para. 5.4.3 (306073)

- Thrustor stroke rate control : see Pneumatics Diagram above
- Long-Part Disposal Kinematics : see last Fig. in Para. 5.4.3 (306073)
- The air supply regulators : control motion rates of various items over air escape valves.

SPARE PARTS

Item		Designation	No.
010	216509	Electrovalve 5/2 monostable 24 V BOSCH No. 0 820 038 052	3
050	217017	Air flow regulator FESTO GRLA-1/8-QS-4	6

5.8.6 (306120) Long-Part Equipment For DECO 20

- On Machine: 199223

DECO 20

The equipment comprises :

- A set of thrust tubes available to accommodate Pickoff Spindle (306004) for various part diameters, see Data Table below.
- S4-spindle belt guard to preclude conflicting geometrics with Long-Part Catcher (306073), see Para. 5.4.3.

Part ∅	Thrust Tube ∅ [mm]	TB Ident. No.	Remarks
20 to 25,4	26 mm		Basic machine
16 to 20	21 mm	562023	
11 to 16	17 mm	562033	
7,5 to 11	12 mm	562034	
2 to 7,5	8,5 mm	562035	

5.8.7 (306136) Long-Part Equipment For DECO 26

- On Machine: 199225

DECO 26

The equipment comprises :

- A set of thrust tubes available to accommodate Pickoff Spindle (306004) for various part diameters, see Data Table below.
- A travel limitation device with shock absorver of tipper feed thrustor.

Part ∅ [mm]	Thrust Tube ∅ [mm]	TB Ident. No.
20 to 25,4	26 mm	562643
16 to 20	21 mm	562642
11 to 16	17 mm	562641
7,5 to 11	12 mm	562640

TORNOS BECHLER

6. MISCELLANEOUS OPTIONS

6.1 (306100) DEEP DRILLING UNIT

- On Machines: 199223 & 199225

DECO 20&26

Components :

040 Thermogamma tank
080 HP pipe
090 Additional tank
100 Strainer
110 Overflow chute
120 Caisson
350 Elbow (A4 3/4")
450 Quick coupling
540 Ball cock
560 Return pipe
600 Thermogamma cooler
610 Filter
620 Filter cartridge
630 Relief valve
650 Submersible pump
660 HP motor-driven pump
670 Coolant level sensor

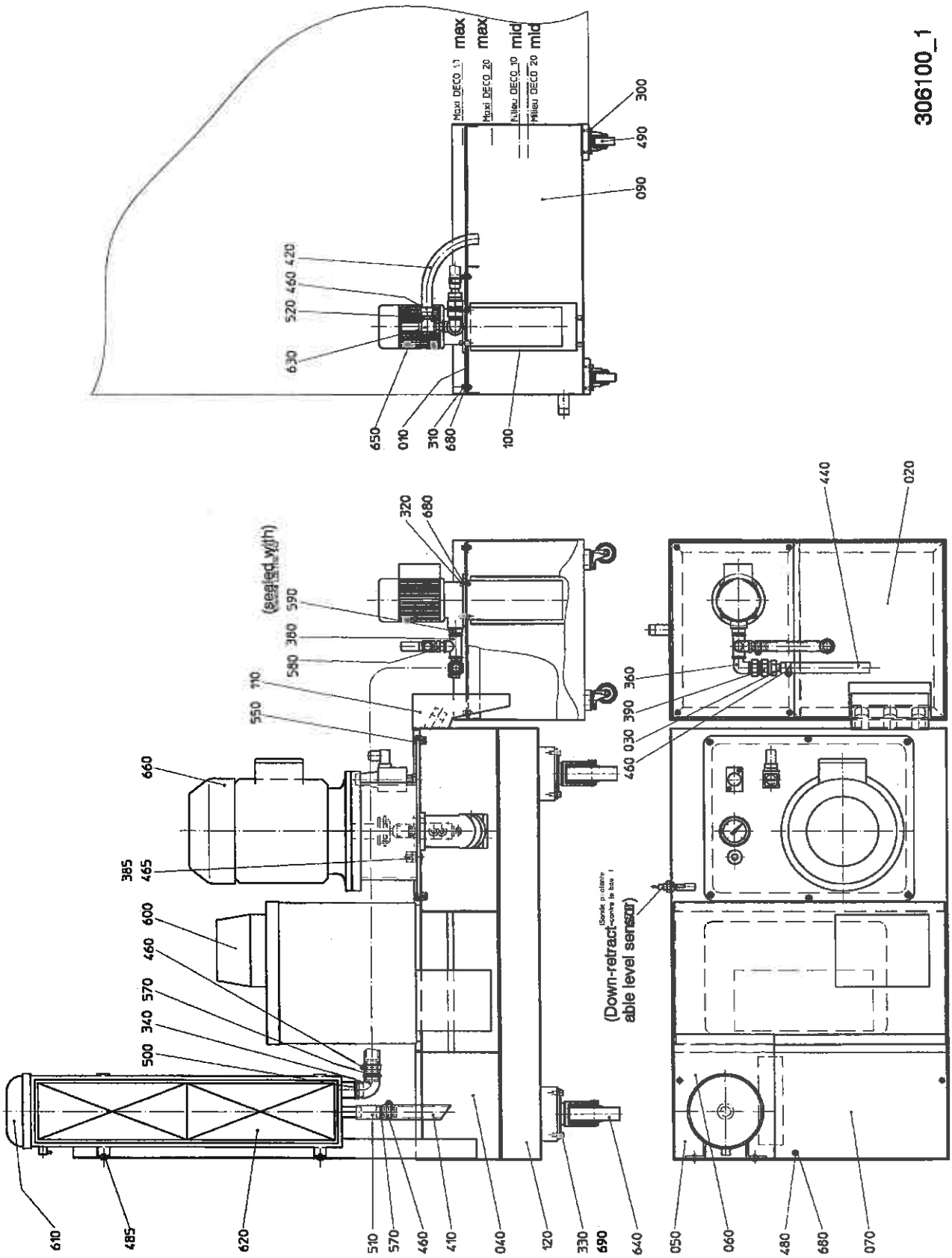
306100_1
Maxi DECO 10 max
Maxi DECO 20 max
Milieu DECO 10 mid
Milieu DECO 20 mid
300
490
090
420
460
520
630
650
010
310
680
100
320
680
(sealed width)
590
380
580
110
550
660
385
465
600
460
570
340
500
610
485
620
510
570
460
410
040
120
330
690
640
(Down-retractable level sensor)
440
020
360
390
030
460
050
060
480
680
070

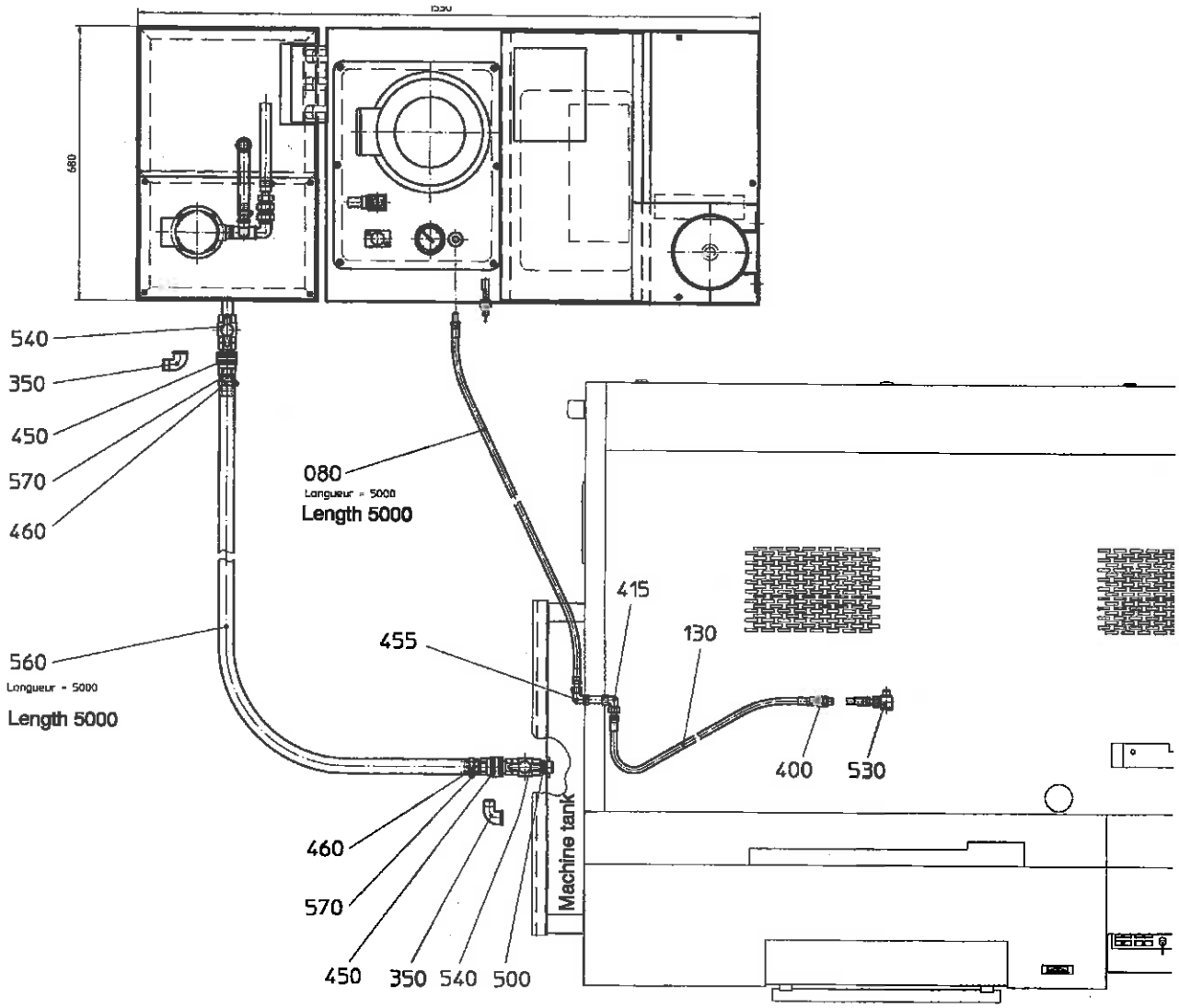

306100_2

DEEP DRILLING UNIT OPERATION

Coolant route :

a. From the drill, the coolant drops down into the machine tank and flows on over Return Pipe 560 into Additional Tank 090, the two tanks being communicating vessels.

b. From Tank 090, Submersible Pump 650 pumps it over Filter/Cartridges 610/620 into Tank 040 (where, if too warm, it is thermostatically cooled by Cooler 600).

Relief Valve 630 precludes damage if the filter cartridges clog.

c. From Tank 040, the liquid (cooled and filtered) is pumped by HP Pump 660 and sent over Pipe 080 onto the drill.

a. From the drill ...

Surplus coolant if any in Tank 040 flows down Overflow Chute 110 directly into Tank 090 where it is taken over as in Item b. above.

Level Sensor 670 monitors any shortage of the coolant.

DATA

DEEP DRILLING UNIT DATA		
		Notes :
• Mounting positions :	T31 to T34 T41 to T44	i.e. frontworking gang i.e. backworking gang
• Drilling diameter :	1.2 to 12 mm	
Coolant :		
• Flowrate :	1 to 25 l/min	infinitely variable
• Pressure, min./max. :	35 / 140 bar	adjustable
• Type :	mineral oil water-miscible fluid	with filter and Thermogamma cooler
Overall dimensions :		
• Length :	1550 mm	
• Width :	680 mm	
• Pipe length :	5000 mm	
Coolant handling :		
• Tank volume, approx. :	90 l	Thermogamma
• Additional tank volume, approx. :	80 .	
• Filter cartridge mesh size :	25 µm	
• Cooler :		Thermogamma sub-mersible cooler with thermostat
$P_{refrigerating}$	3.17 kW	
$P_{consumption}$	4.14 kW	
Cooling agent :	R 134 A	
• Submersible pump :	TS 13/250	Brinkmann
Power :	0.27 kW	
Pressure :	< 3.5 bar	
Output :	< 30 l/min	
Viscosity :	< 90 mm^2/s	
• Motor-driven pump :		Rexroth
Power :	2.2 kW	
Pressure :	< 140 bar	
Output :	< 25 l/min	
• Frequency converter power :	1.5 kW	

▲ **Caution !**

- Make absolutely sure to correctly connect the piping to the unit and to close the guards before you turn the HP pump on.
- Comply with the tooling manufacturer's directions.
- Comply with the pressure and flowrate settings given in the table below.
- Check coolant level.
  See also your Instructions 300195:
  DIRECTIONS FOR USE OF CUTTING FLUIDS

TORNOS BECHLER

DEEP DRILLING UNIT DESCRIPTION

- Application : deep front / back drilling
- Drill type : SIG or BOTEK
  special deep-drilling HP thru-coolant drills
- Other drill types : KLENK, GUHRING, etc.
  i.e. due to variable pressure also low rated pressure drills requiring high flowrates can be used.
- Pump output : variable over frequency converter
  acc. to drilling diameter required
- Electric interface : required for connection of the unit

DEEP DRILLING UNIT CONTROL

- Deep drilling control : over M-functions
  See your Instructions 300403:
  USER INTERFACE OPERATION,
  Para. 9.7: Deep Drilling Operation.

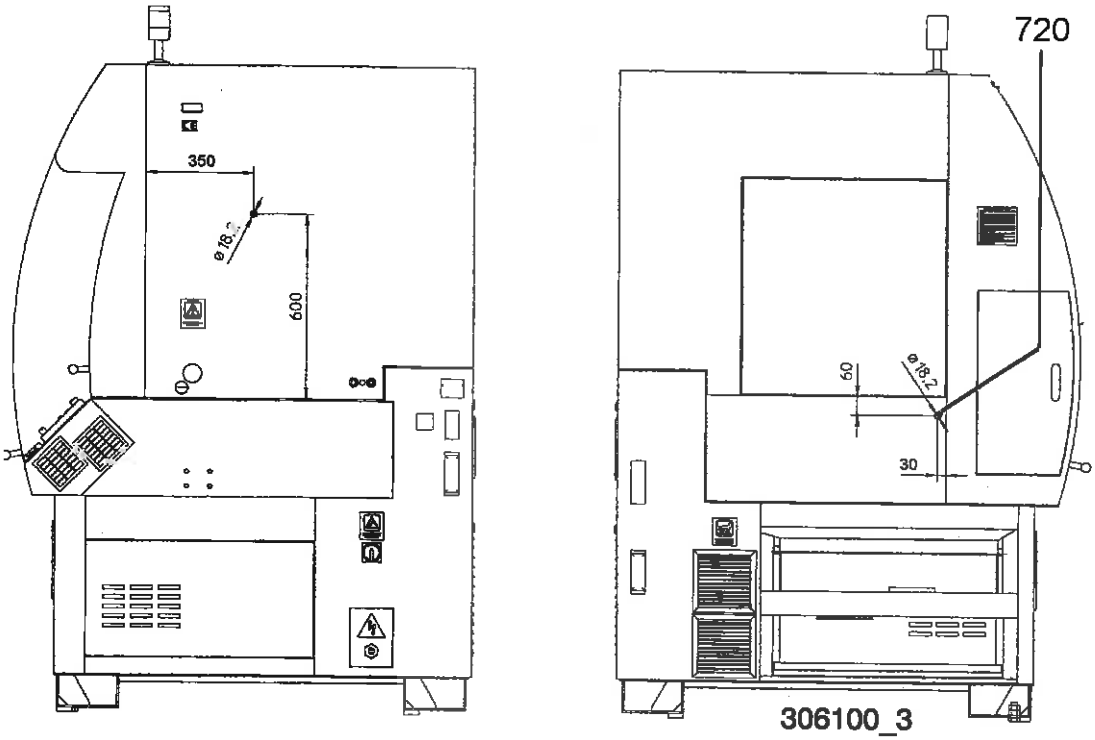

DISMOUNT / MOUNT

DISMOUNTING / MOUNTING DEEP DRILLING UNIT

Note : The two 5m-long flexible pipes allow for flexible arrangements (see Figs 306100 above).

To start with : Turn Main Switch off and lock it.

What to do ?	How ? What for ? Notes
Dismounting	
• Disconnect the electric cable:	The socket is situated on the LH side of the machine, behind the chip tray.
• Dismount HP Pipe 080.	Use 22 mm wrench.
• Close both Cocks 540.	
• Dismount Return Pipe 560 ...	... over Quick Couplings 450.
Mounting	
• Position Tank 090 against Tank 040.	
• Mount Overflow Chute 110.	
• Connect Tank 090 with the machine tank with Return Pipe 560 ...	... and over Quick Couplings 450.
• Open both Cocks 540.	Make sure the liquid flows correctly over the return pipe.
• Connect HP Pump 660 to the drilling unit with HP Pipe 080.	See Fig. 306100_3 overleaf.
• Connect the unit's electric cable to the machine.	The socket is situated on the LH side of the machine, behind the chip tray.
Checking	
• Turn on the machine ...	... and stand by approx. 5 min for the coolant to be distributed evenly in its various tanks.
• Check the coolant level ...	... by means of a level indicator of the oil tank.

SETUP

PARAMETERS FOR DEEP DRILLING WITH A SINGLE-LIP DRILL Source : BOTEK		
Drilling ∅ [mm]	**Output Q [l/min]**	**Operating pressure [bar]**
0.9	0.5	140
1.2	1	140
1.6	2	130
2.0	3	120
2.5	4	110
3.2	5	100
4.0	6	90
5.0	7	80
6.3	9	70
8.0	12	60
10.0	18	55
12.0	24	50

MOTOR-PUMP GROUP DATA

PUMP DATA		
Output Q [l/min]	**Frequency [Hz]**	**Operating pressure [bar]**
1	7	140
2	14.5	140
4	28.5	140
6.5	46.5	140
7	5	130
7.5	53.5	120
8	57	112
9	64.5	100
10	71.5	90
11	78.5	82
13	93	70
15	107	60
18	128.5	50
25	178.5	35

PUMP OUTPUT vs. PRESSURE / MOTOR POWER

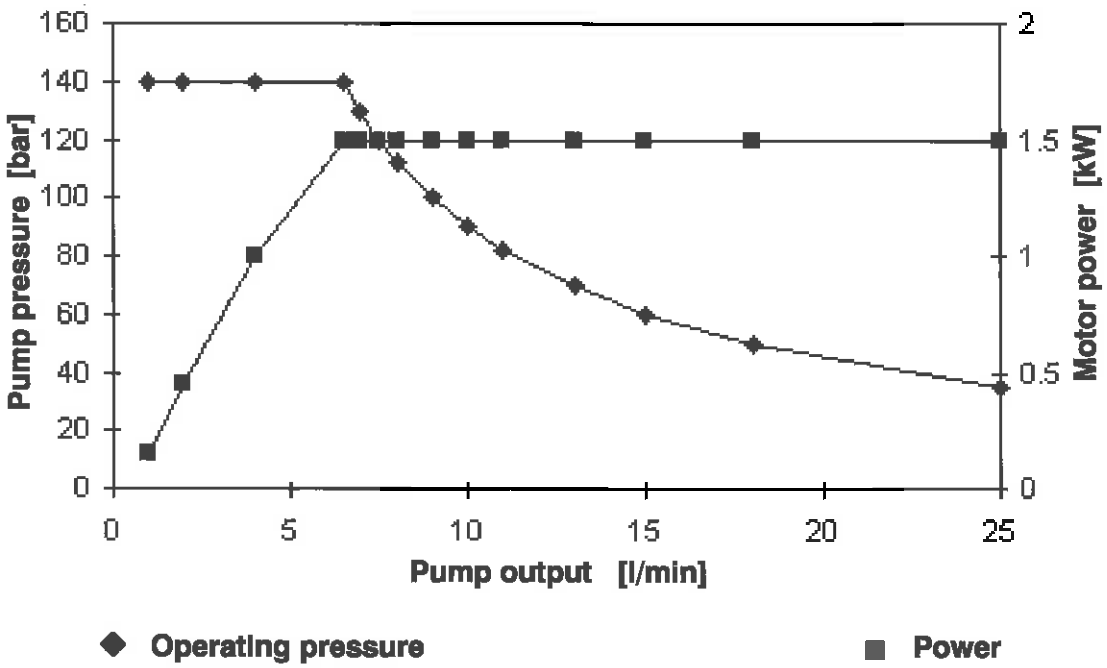

CLEAN

CLEANING ADDITIONAL TANK AND ITS STRAINER	
Maintenance Interval :	Clean the additional tank and its strainer every 2 months or at least every 500 hours' operation.
What to do ?	How ? What for ? Notes
Cleaning • Turn the machine off • Unscrew four Screws 310. • Pull out Submersible Pump 650 together with its Support 010. • Take out Strainer 100. • Clean Strainer 100 and the bottom of Additional Tank 090 ... • Fit the components back in place.	... if required.

CHANGE

CHANGING FILTER CARTRIDGES	
Maintenance Interval :	Change filter cartridges semi-annually or at least every 1000 hours' operation.
What to do ?	How ? What for ? Notes
• Turn the machine off	
• Remove the cover of Filter 610 ...	... by releasing it from its clamp.
• Keep taking out the filtering element ...	... until Pipe 410 is out of the tank.
• Put in a receptacle between Pipe 410 and Tank 040 ...	... to avoid contaminating the filtered oil in Tank 040.
• Take out Filtering Cartridges 620.	
• Clean other components ...	... if required.
• Put in two new Filtering Cartridges 620.	
• Fit the components back in place.	

CHECK

INSPECTING FLEXIBLE PIPE	
Maintenance Interval :	Inspect the flexible pipe weekly or at least every 50 hours' operation.
What to do ?	How ? What for ? Notes
Inspecting	
• Make sure that Flexible Pipe 560 is not blocked by swarf.	
Cleaning	
• Dismount Pipe 560 and clean it ...	... if required.

SPARE PARTS

Item		Designation	No.
620	215990	Filter cartridge 25 micron	2

6.2 (216174) MINI-SENSOR

- On Machines: 199223 & 199225 DECO 20&26

Components :

010 Mini-sensor
020 Pressostat
030 Fixing rods
040 Nut clamp
050 Y-connector
060 Coaxial tube
070 Additional sensing pins

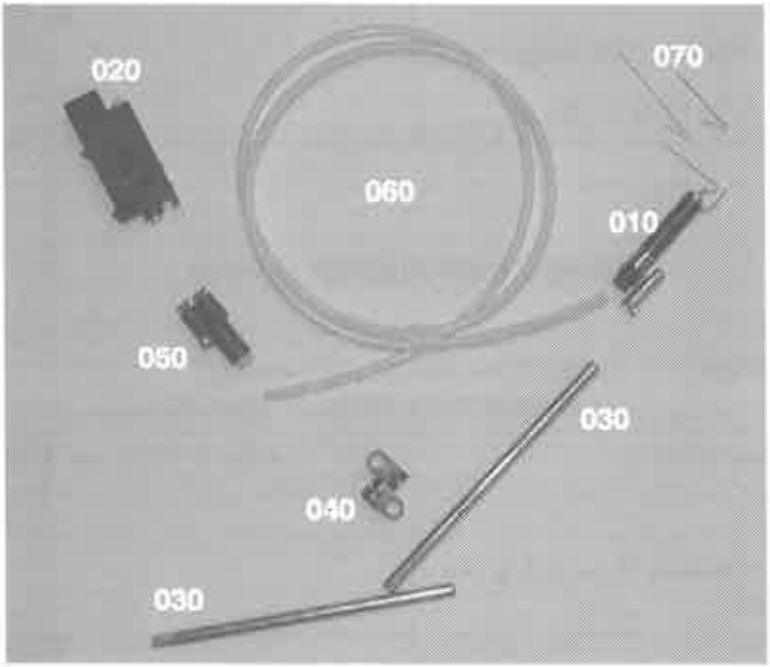

216174a

MINI-SENSOR DESCRIPTION & DATA

- Design : modular
- Application : tool presence
- Detection method : by touch of sensing pin
- Drive : air
- Maintenance : none
- Service pressure, min.: 4 bar
- Sensing pin lengths : 40 and 60 mm
- Sensing stroke : 90°
- Sensed diameter, min.: 0.3 mm

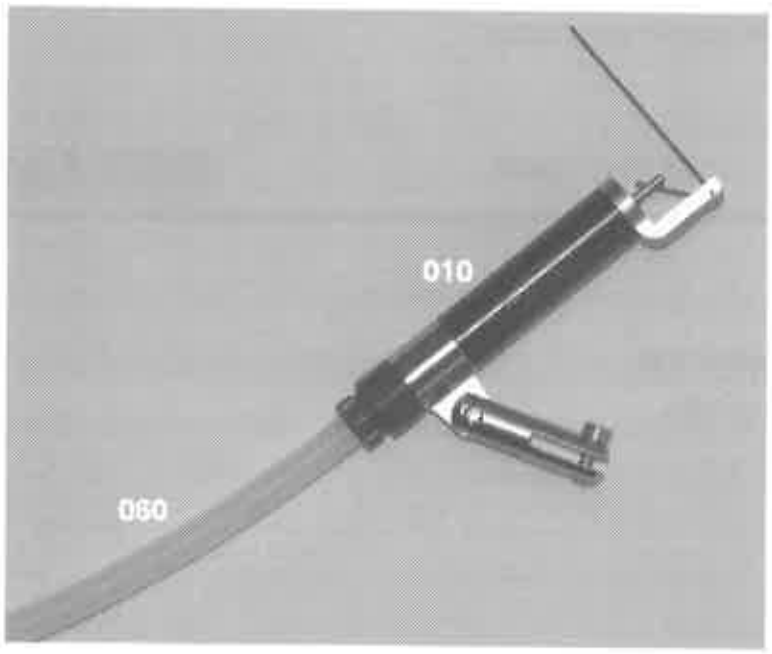

216174b

MOUNT

MOUNTING MINI-SENSOR	
What to do ?	How ? What for ? Notes
Mounting • Push in Coaxial Tube 060 into Mini-Sensor 010. • Push in Coaxial Tube 060 onto Bypass Y 050. • Connect the air valve output with *Mark 1* of Y-Connector 050. • Connect the pressostat to *Mark 2* of Y-Connector 050.	

MINI-SENSOR OPERATION

- Air passage : Whenever a tool retracts, the air passes through the unit over a roller valve or an electrodistributor.
- Air passage duration : 0.2 to 0.5 s approx.
- Sensing interpretations :
  a. Tool is not broken :
  The sensing pin touches the tool and no signal is received.
  Once the pneumatics are off, the sensing pin is reset, i.e. retracted mechanically by a spring.
  b. Tool is broken :
  The sensing pin reaches its stroke limit.
  The air passes through the return pipe and the pressostat converts this air passage into an electric signal.
- Electric power supply : None, connection to the pressostat is enough.

6.2.1 (305091) Mini-Sensor Pneumatics

- On Machines: 199223 & 199225

DECO 20&26

Components :

010 Electrodistributor YVx

040 Air supply regulator

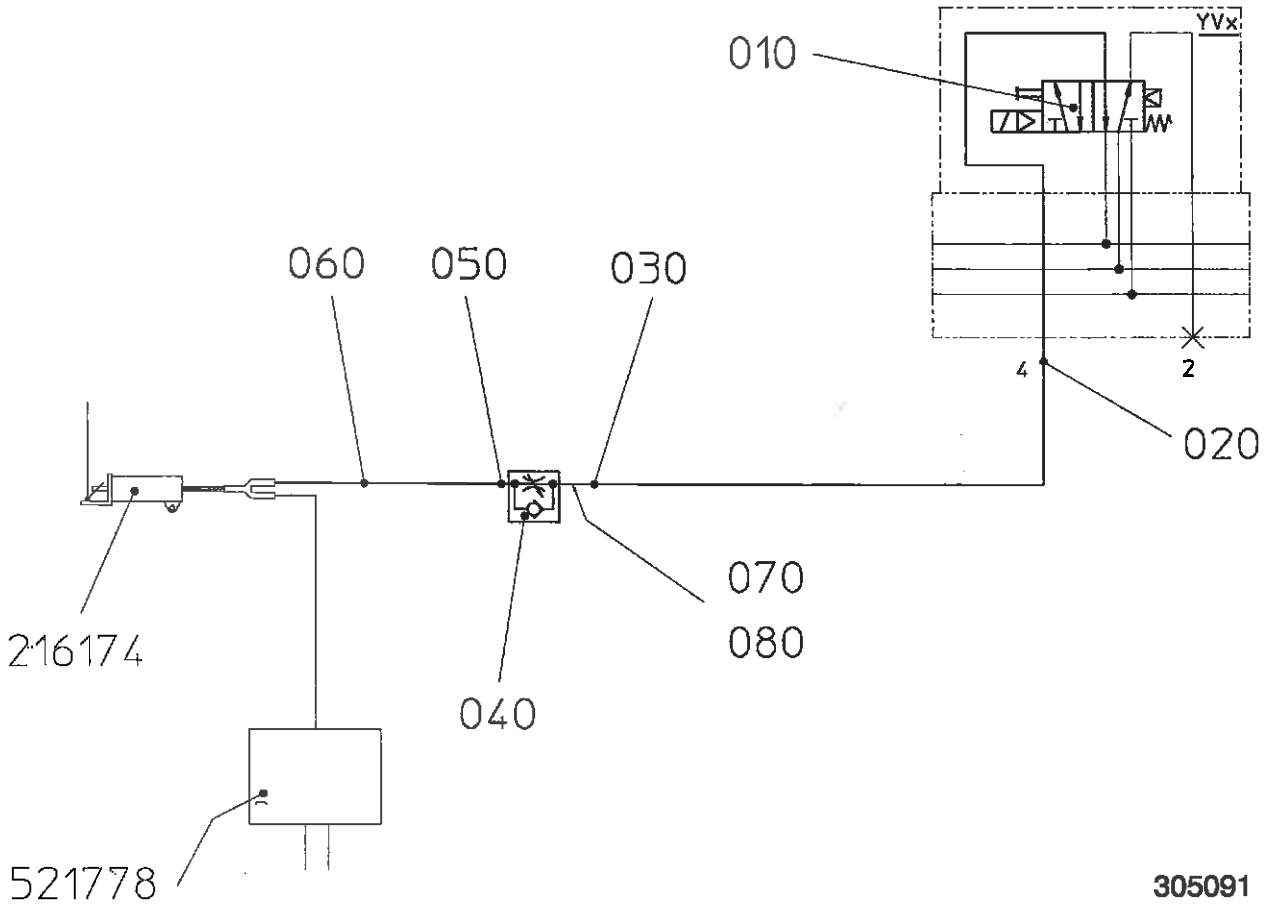

▲ Caution !

- Make sure the air-supply pipe for the mini-sensor stays clear of all working components.
- Keep the air-supply pipe clear of swarf to avoid premature deterioration.

MOUNT

MOUNTING MINI-SENSOR	
To start with : Turn the machine off over Main Switch.	
What to do ?	How ? What for ? Notes
Mounting	
• Remove the closing plate.	
• Fit Electrodistributor 010 in an available position on the distribution plate.	If two mini-sensors side by side are required, fit in Connections 070 and 080.
• Fit a subassembly of Air Supply Regulator 040 with its connections ...	... at *Output 4* on the distribution plate.
• Pull and connect the air pipe to the mini-sensor.	Adjust the pipe length according to the mini-sensor position.
• Connect the electrics :	See your TB electrical instructions.

MINI-SENSOR PNEUMATICS OPERATION

- Mini-sensor control : over Electrodistributor 010
  Once the electrovalve is live, the mini-sensor is activated.
- Mini-sensor rate setting : over Air Supply Regulator 040
  A setup operator to set the rate mainly for sensing a fragile work or tool, i.e. to preclude a damaging / destroying impact on the work or tool.

SPARE PARTS

Item		Designation	No.
010	216509	Electrovalve 5/2 monostable 24 V BOSCH No. 0 820 038 052	1
040	216698	Air-flow regulator Festo GRLA 1/8 QS 6	3

6.2.2 (306063) Mini-Sensor Fittings

- On Machines: 199223 & 199225 DECO 20&26

Components :

010	Rods	M6
020	Rods	dia. 8
100	Nuts	M6
110	Nut clamps	
120	Washers	

⚠ **Caution !**

When mounting the mini-sensor fittings make sure :

- to stay clear of the machine axes and tools.
- to keep swarf clear of fixing rods.

MOUNT

MOUNTING MINI-SENSOR FITTINGS	
What to do ?	How ? What for ? Notes
Mounting	
• Fit Nuts 100 and Washers 120 on two threaded Rods 010.	
• Screw in the two threaded rods and tighten the nuts :	in the machine acc. to the mini-sensor position.
• Fasten Rods 020 with Nut Clamps 110	For more rigidity, fasten the rods in a triangle.
Note : The remaining nut clamp is for fixing Mini-Sensor (216174)	

MINI-SENSOR FITTINGS OPERATION

- Application : fixing one or more mini-sensors
- Mini-sensor positioning : by shifting rods and nut clamps for a large sensing range

6.3 (306041) 15-BAR PUMP

- On Machines: 199223 & 199225

DECO 20&26

Components :

200	Gear pump
240	Circuit selector
270	Metal coupling for Nylflex tube
300	Washer 8.4x16x1.6
310	Hex nut M8
320	Antivibration buffer
330	Screw M8 x 12

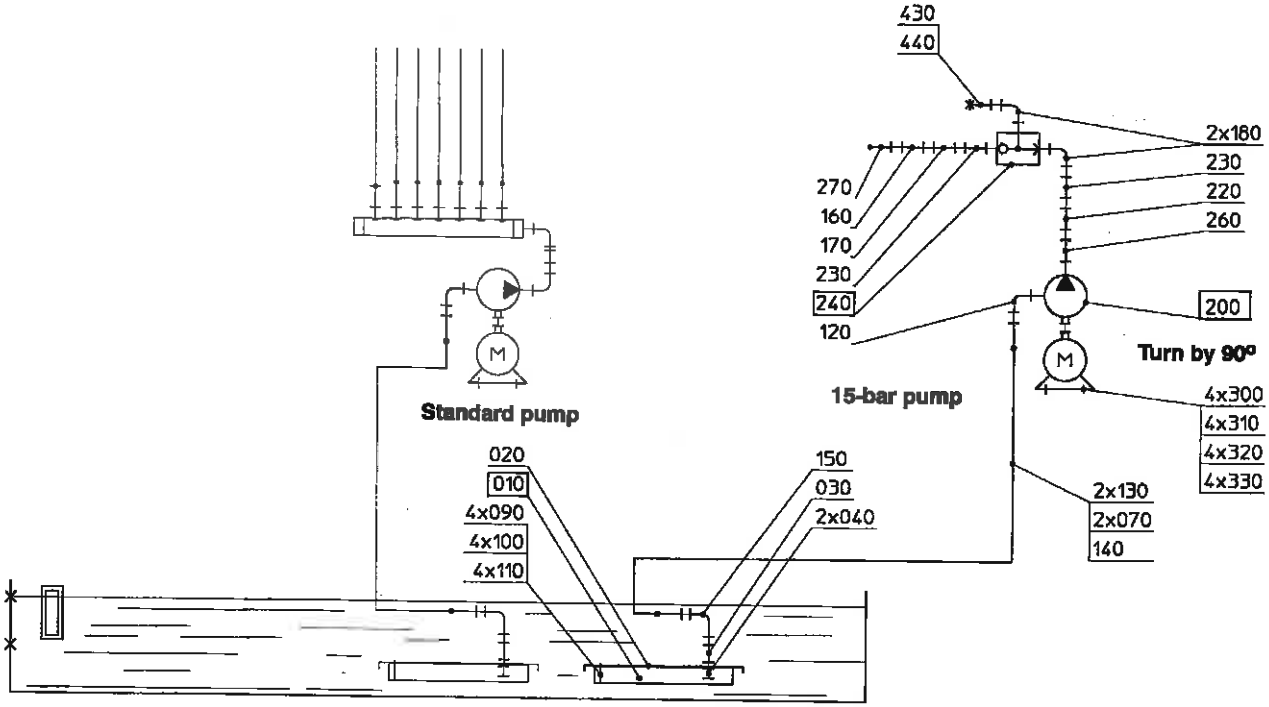

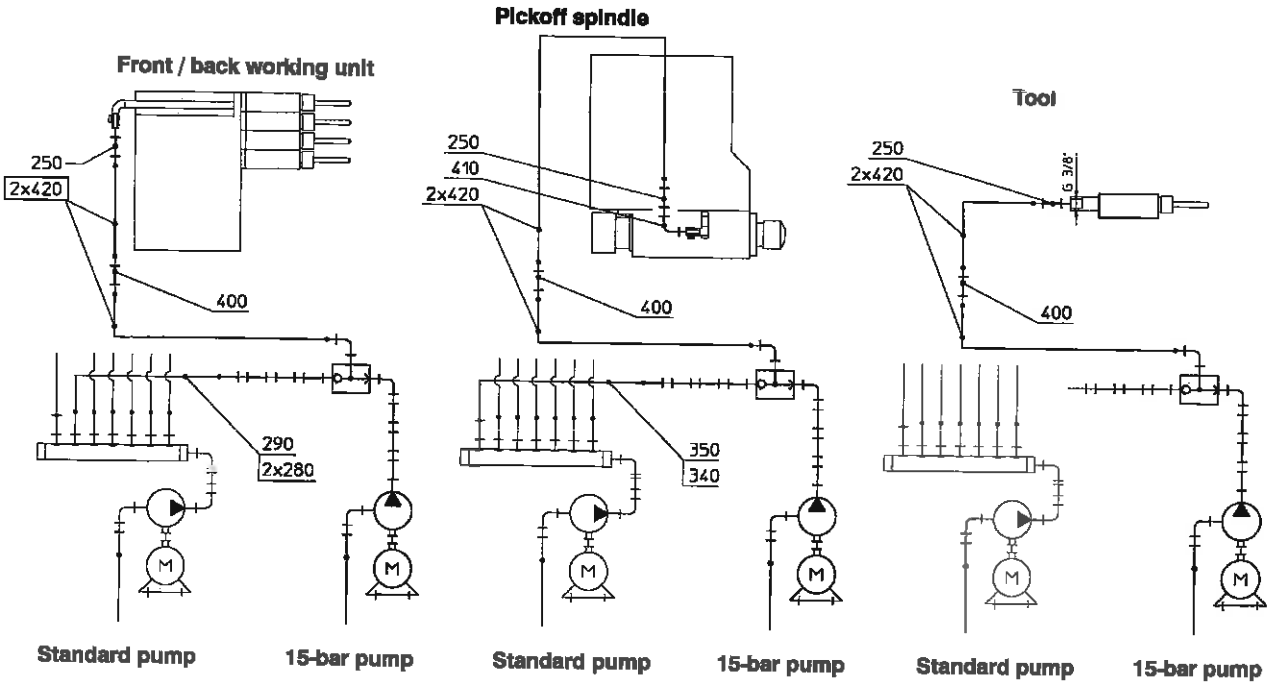

15-BAR PUMP DESCRIPTION

- Application : interim HP coolant nozzles directed at a single tool or a tool system.
- Design : modular

▲ Caution !

After fitting such a nozzle, make absolutely sure that the oil jet direction remains constant throughout the machining cycle.

A misdirected HP coolant jet may :
- splash coolant outside the machine,
- accumulate swarf in remote corners of the machine,
- diminish machine performance.

Use the HP coolant with discretion, i.e. when necessary only:
Oil warms up through uninterrupted use.

DATA

15-BAR PUMP DATA		
General :		Notes :
• Pump output :	24.5 l/min	infinitely variable
• Pressure, max.:	**20 bar**	
• Motor power rating :	1.5 kW	
• Motor type :	asynchronous	

15-BAR PUMP OPERATION

- Pump-motor unit sucks the coolant through a suction filter.
- Circuit pressure : depends on circuit resistance but cannot exceed **20 bar**
- Circuit Selector 240 : allows for parallel connection of another pump: With another pump, the operating overpressure acts upon the selector and is commuted to the outlet conduit.

Note : Make sure that the pump is not overloaded when the coolant system operates at its 100% capacity.

An operating power *P = Pressure x Output* changes directly into heat in the coolant and warms up the machine.

MOUNT

INSTALLATION OF 15-BAR PUMP	
Note : The recommended installation is ex works.	
What to do ?	How ? What for ? Notes
Mounting	
• Take down the RH see-through hatch:	to reach the RH zone of the machine, below the main spindle.
• Remove the chip and oil tanks from the machine.	• Take out and hang the suction filter.
• Put in and fix the 15-bar pump alongside the standard pump.	• Fit in four Antivibration Buffers 320. Use Screws 300, 310, 300.
• Put the oil tank in place and the suction filter into the tank.	
• Connect the motor to the mains.	

CONNECT

CONNECTING 15-BAR PUMP	
What to do ?	How ? What for ? Notes
to PICKOFF SPINDLE	
• Disconnect the standard coolant pipe.	
• Connect the standard pump to Circuit Selector 240 :	i.e. Air Pipe 340.
• Connect Hydraulic Pipes 420 to the pickoff spindle ...	... over BANJO Elbow 410 to be substituted for the air coupling.
to FRONT AND BACK WORKING UNITS	
• Disconnect the standard front / back working unit coolant pipe from the standard pump.	
• Connect the outlet with Circuit Selector 240 :	over NYFLEX Pipe 290.
• Connect Hydraulic Pipes 420 in place of the standard front / back working unit coolant pipe.	
to a TOOL	
• Lay Hydraulic Pipes 420 at the back of the machine ...	... to facilitate access later. Unless the distance is longer, a single Pipe 420 will do.

ADJUST

SETTING 15-BAR PUMP PRESSURE	
Note : The pressure setting ex works is **20 bar** and can be lowered only !	
To start with : Block all openings. Connect pressure gauge.	
What to do ?	How ? What for ? Notes
Setting • Turn in / out the pressure setting screws on the pump ...	... as much as necessary to obtain required pressure.

CLEAN

CLEANING 5-BAR PUMP STRAINER	
Maintenance Interval : Clean the strainer semi-annually or every 1000 hours' operation.	
What to do ?	How ? What for ? Notes
Cleaning • Take out the strainer from the tank. • Remove the four cover fastening screws. • Clean the components. • Reassemble the filter. • Put the filter back into the tank.	

Item		Designation	No.
010	463132	Strainer	1
200	216252	Gear pump + motor 350FB/M1,5 SGN	1
240	212095	Circuit selector	1
420	481173	Flexible pipe 10 mm diam., 2830 mm long	2
	217341	Coupling Pump Item 200	1

6.4 (306118) CHIP CONVEYOR

- On Machines: 199223 & 199225

DECO 20&26

Components :

010 Chip conveyor

CHIP CONVEYOR DESCRIPTION

- Type : SERMETO 400K
- Application : for all sorts of chips
- Noise : < 70 dB

CHIP CONVEYOR STARTUP, OPERATION & HANDLING

▲ **Attention !**

- You will find a standard interface specified by TORNOS-BECHLER in your Instructions 300413: INTERFACE REQUIREMENT FOR CHIP CONVEYOR. It gives specifications for electrical and mechanical connection of the chip conveyor to be strictly followed.
- No startup is allowed before the conveyor is fully integrated with the machine.

☐ **Note :**

- Do not operate the conveyor without the chip pans (as delivered) or another appropriate chip receptacle.
- To ensure a good operation, keep the conveyor moving even when the machine provides chips intermittently only.
- For customizing your conveyor's on / off times, please contact Tornos-Bechler After-Sales Service.

- For handling, see Fig. 30618_2a: Sling Handling of Chip Conveyor, below.

▲ **Warning !**

Use slings adequate for the weight of the chip conveyor.

TORNOS BECHLER

306118

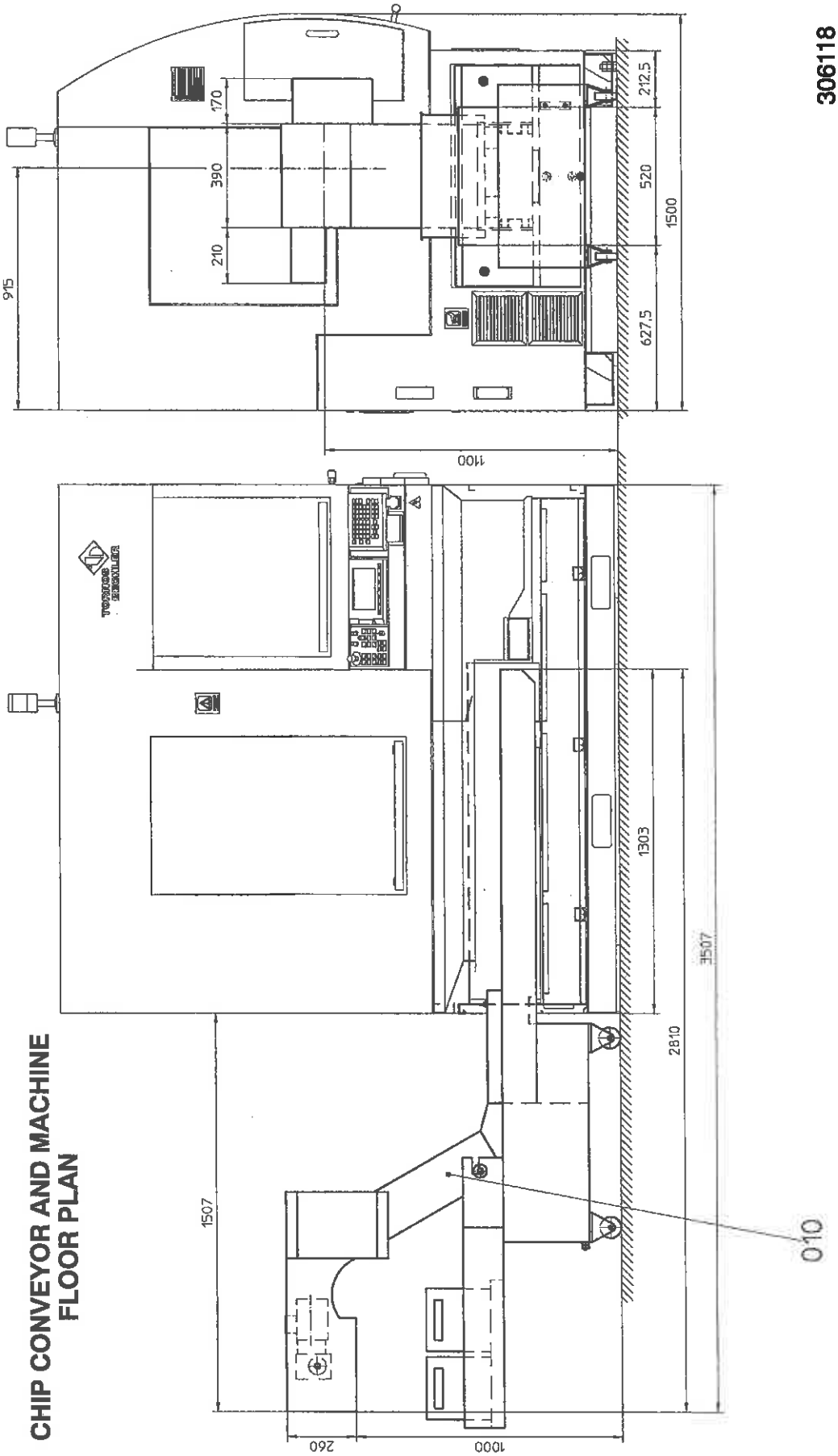

CHIP CONVEYOR AND MACHINE FLOOR PLAN

SLING HANDLING OF CHIP CONVEYOR

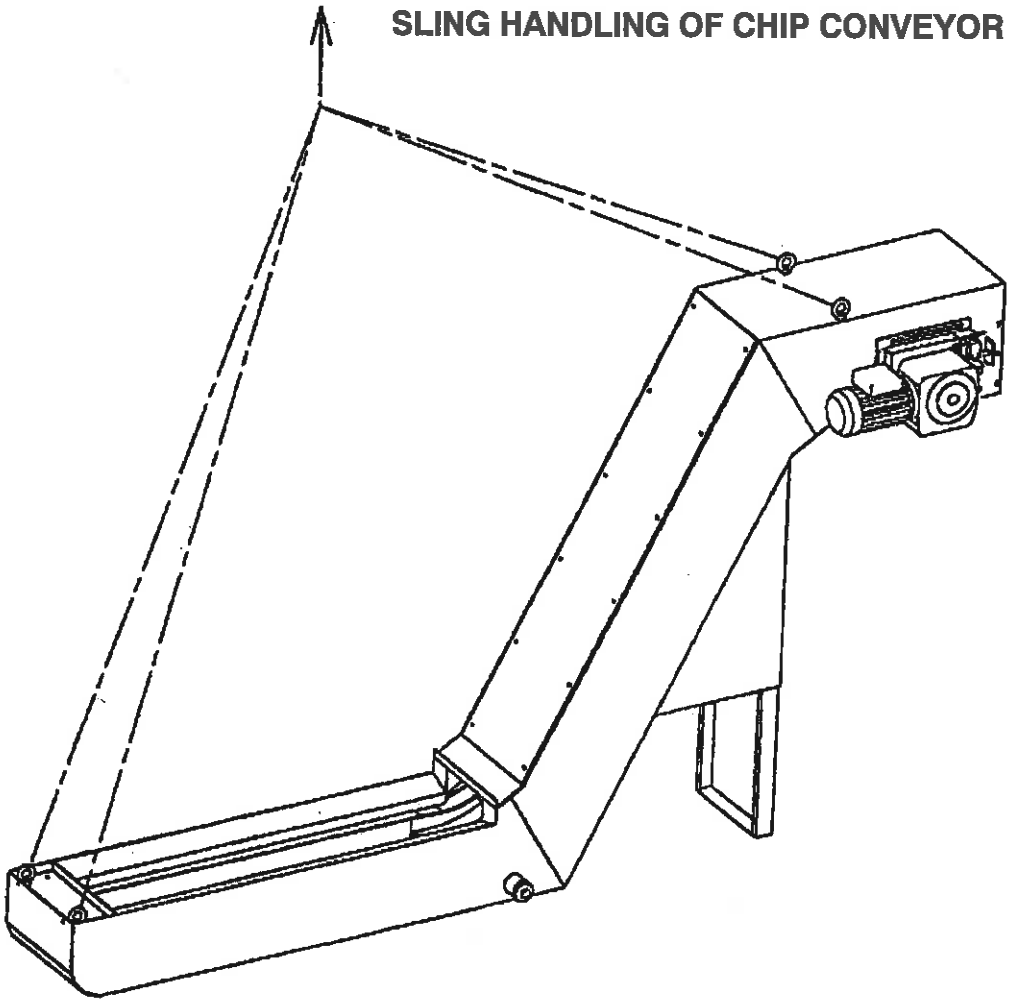

306118_2a

CHIP CONVEYOR FILTERING GRATE

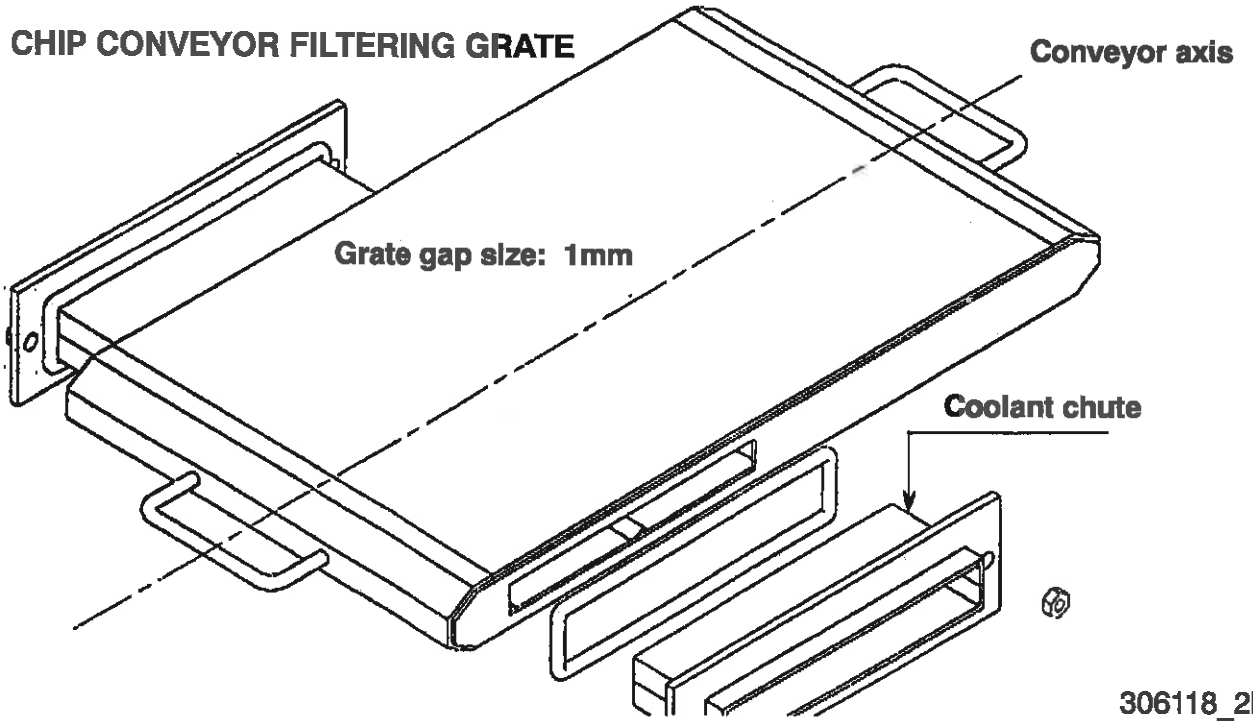

306118_2b

CHIP CONVEYOR ELECTRICS

- Standard : EN 60 204-01
- Interface delivered : 400 V / 50 Hz + 10%, three phase
  or
  460 V / 60 Hz+ 10%, three phase

  For details, see also your Instructions 300413: INTERFACE REQUIREMENT FOR CHIP CONVEYOR. It gives specifications for electrical connection to be strictly followed.
- Black stop switch : stops automatic run, forward and backward jog runs

CHIP CONVEYOR MECHANICS

- Rollers : for smooth integration with the machine and not for longer displacements.
- Jack screw : for good interfacing with the machine
- Adjusted foot : Adjust the foot to eliminate rocking of the conveyor.

CHIP CONVEYOR STARTUP

Follow this sequence :

- Make sure to have correct motion direction of chains / scrapers,

  Correct motion direction : see Fig. 306118_4b, below.
- Make sure to have correct tension of chains / scrapers

  Correct tension : On its upper tight side, next to the driving pinions, the chain resists pressure by hand, see Fig. 306118_3, below.
- Set the electrical and mechanical safety system, see Fig. 306118_4a.

  After a spurious release, act upon the spring-setting nut.
- Now let the conveyor run 30 minutes without machining.

MAINTENANCE

TENSIONING CHIP CONVEYOR CHAINS

▲ **Warning !**
Turn the conveyor's power off before any maintenance work.
For details, see Safety Regulations for DECO 2000 / *20 & 26 mm*.

Maintenance Interval : Re-tension the chains every 200 hours' operation.

What to do ?	How ? What for ? Notes
Tensioning • Tension the chains with the two tensioning screws located near the conveyor drive.	See Fig. 306118_3

PERIODICAL MAINTENANCE

CHIP CONVEYOR MAINTENANCE WORKS

▲ **Warning !**
Turn the conveyor's power off before any maintenance work.
For details, see Safety Regulations for DECO 2000 / *20 & 26 mm*.

Maintenance Interval	What to do ?	Notes
Every 2 months	• Check the chain tension.	
Every 4 months	• Clean the chains, scrapers and filtering grates. • Drain the caissons. • Tension and grease the chains. • Inspect electrics and mechanics of the drive system.	
Every 600 hours :	• Grease the chains.	**of dry machining**

DISMOUNT / MOUNT

DISMOUNTING / MOUNTING CHAINS AND SCRAPERS of Chip Conveyor See Figures 306118_3 and 306118_4b.	
What to do ?	How ? What for ? Notes
Dismounting	
• Remove the internal guards facing the chains in the discharge caisson.	
• Dismount the bearing casings.	
• Keep moving the chains until quick-clips face the holes in the discharge caisson under the bearing seats.	• If you cannot move the chains, remove the two chain links facing the hole in the discharge caisson under the bearing seat. Continue as below.
• Unlock the bearing seat fixing flanges.	
• Relax the chains ...	... with the two tensioning screws.
• Unscrew the lockwasher ...	... at the end of the drive shaft.
• Take down the motor.	
• Unscrew the attachment screws ...	... of the bearings.
• Remove the flanges.	
• Take out the quick-clips ...	... from the chains.
• Throw off the chains ...	... by pulling them on the slack lower part side on the discharge end.
Mounting	
• Change all worn or damaged items.	
• Remount the components ...	... in a reversed order as given above. Comply with the scraper motion direction.
• Adjust the scrapers ...	... allowing for backlash.
• Set the electrical and mechanical safety system for the drive.	See Fig. 306118_4a.

DISMOUNT / MOUNT

DISMOUNTING / MOUNTING FILTERING GRATE of Chip Conveyor See Figures 306118_2b. Note : A dismountable scraper, screwed to the scraper supports allows for easy dismounting of the filtering grate, see Fig. 306118_4b.	
What to do ?	How ? What for ? Notes
Dismounting	
• Keep moving the chain ...	until the removable scraper reaches the middle of the filtering grate.
• Unscrew the scraper support screws ...	... and dismount the scraper.
• Unscrew the fixing nuts of the chute(s) ...	... at the sides of the conveyor in the oil-flow opening.
• Pull out the filtering grate.	
Mounting	
• Align the grate axis with the longitudinal axis of the conveyor.	
• Fit in the chute(s) ...	... with their gaskets.
• Keep tightening the fixing nuts ...	... until to the inner edges of the chute(s) come against the edges of the grate.
• Fit the scraper in place.	▲ **Caution !** Comply with the motion direction.

CHIP CONVEYOR CHAINS / SCRAPERS

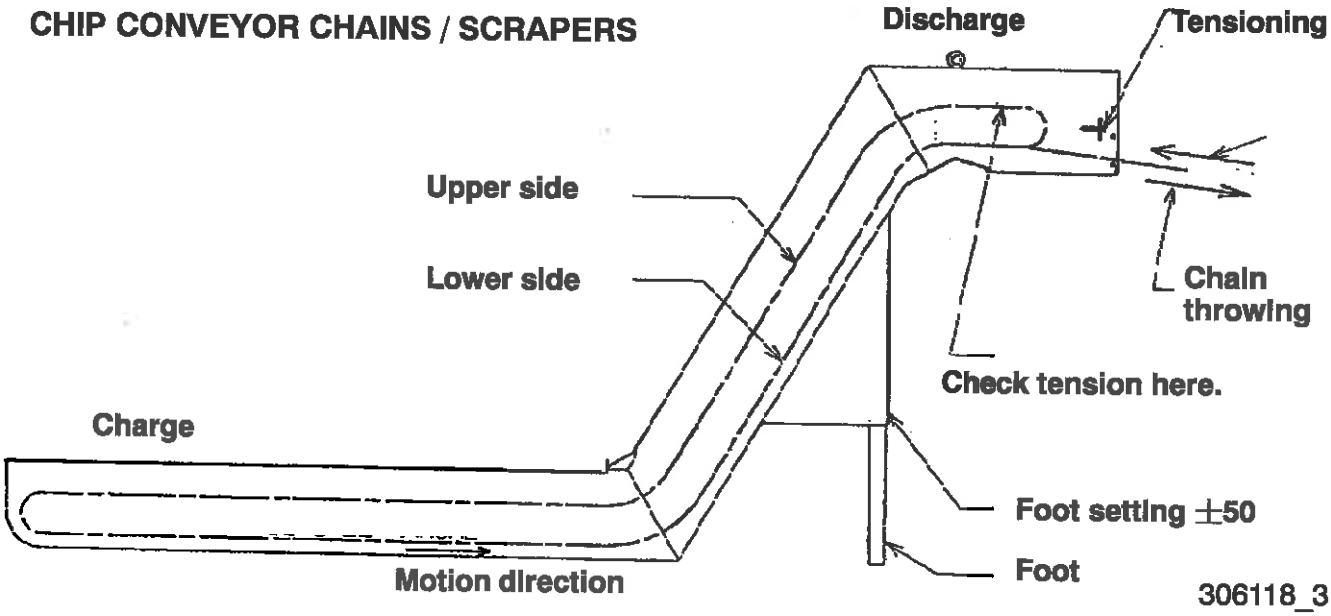

TROUBLESHOOTING

TROUBLESHOOTING CHIP CONVEYOR		
Trouble	**Why ?**	**Shooting**
Safety released with no chip jam.	Misadjustment of electrical and mechanical safety system.	Adjust safety correctly according to indications and figures.
	Chains not tight enough.	Tension chains with two tensioning screws located near conveyor's drive.
Safety released with chip jam.	Excessive accumulation of chips.	Jog back over electric cabinet or machine control panel. or Keep switching on forward run to decongest.
Scrapers locked.	Work, tools or other objects of dimensions incompatible with conveyor.	Run backward to unlock.
		If unsuccessful, remove conveyor from machine and dismount chains.
No discharge of cutting fluid from conveyor.	Filtering grate clogged.	Clean filtering grates. and Dismount assembly if required.
Motor-reducer overheated.	Oil shortage.	Fill up.
	Incorrect power of thermal overload switch.	Check and change overload switch to accommodated its power to that of motor-reducer.

CHIP CONVEYOR SAFETY

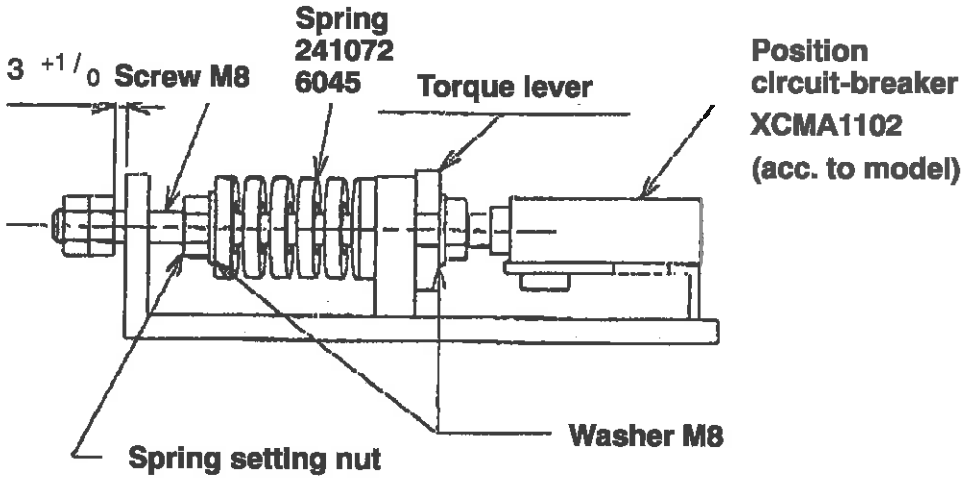

306118_4a

CHIP CONVEYOR CHAINS / SCRAPERS

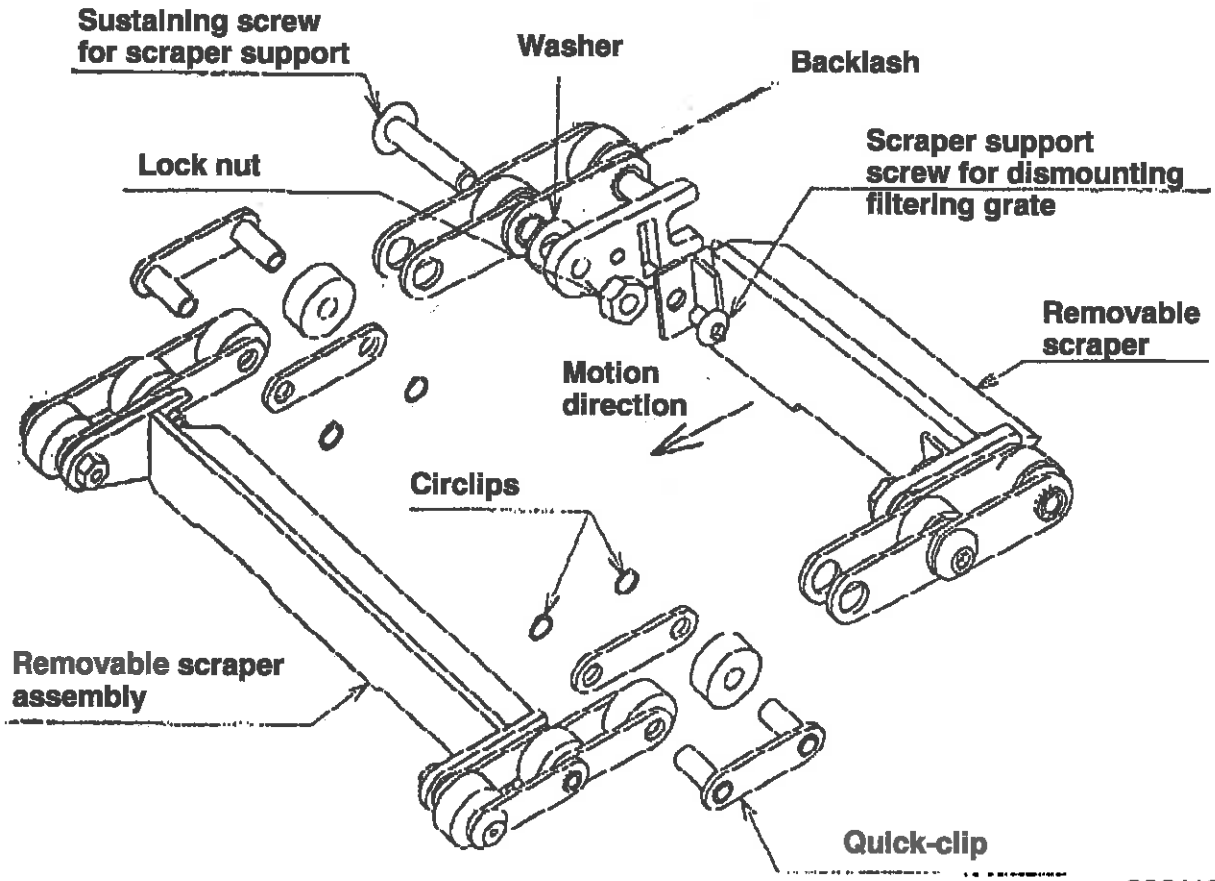

306118_4b

6.5 (217751) OIL COOLER

- On Machines: 199223 & 199225 DECO 20&26

TECHNICAL DATA

Oil cooling system, type KRO 20 DP KELVIN

• Cooling power	2,5 kW
• Room temperature maximum	32°C
• Oil output temperature	20°C
• Supply tension	400/460V – 3 – 50/60 Hz
• Power requirement	1,2 /1,5 kW
• Nominal intensity	3,1 / 3,2 A
• Pump flowrate	10 l/min. at max. 10 bar
• Oil type	cutting oil
• Precision	+/- 2°C
• Execution	without tank, with pump with automatic bypass valve with electronic thermostat with display with 3 signals with wheels with flowrate control with air filter
• Refrigerating fluid	R 134 A
• Connection	G3/4"
• Dimensions	960 x 485 x 650 mm
• Weight	105 kg
• Paint	RAL 7035 light-grey

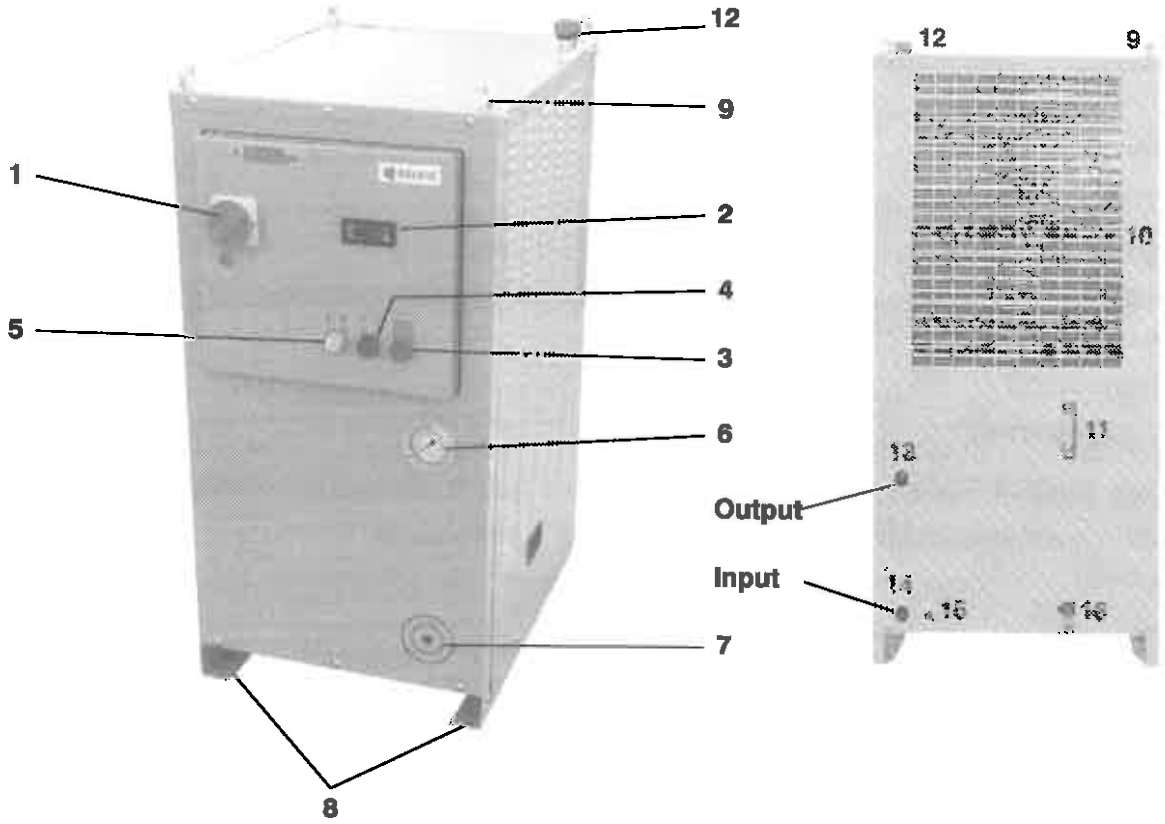

1. Main switch
2. Electronic monitoring thermostat with display
3. General alarm lamp (red)
4. Compressor lamp in operation (green)
5. Tension presence lamp (white)
6. Oil manometer
7. Hole for the pump ventilation
8. Support feet
9. Lifting hooks
10. Condenser
11. Oil level
12. Filler plug of oiltank
13. Oil output connection
14. Oil input connection
15. Electrical supply
16. Tap for oiltank emptying

6.5.1 Function

Exclusively on machines with whole oil.

Maintaining of ideal oil temperature between 20° and 25° for:

- Rapid thermic stabilisation of machine structure

- Optimal utilization of cutting tools
- Optimal utilization of cutting oils.

6.5.2 Description of use

The cooler is mounted on the barfeeder side.

Integrated flowrate control.

A flexible tube of 6 meters connects the oiltank to the cooler. Output and input at G3/4 inch. Taps allow to close the oil circuit.

6.5.3 Use and maintenance

Weekly check of filter and suction the interior of the oiltank. Clean if necessary.

Use and maintenance according to cooler supplier's instructions.

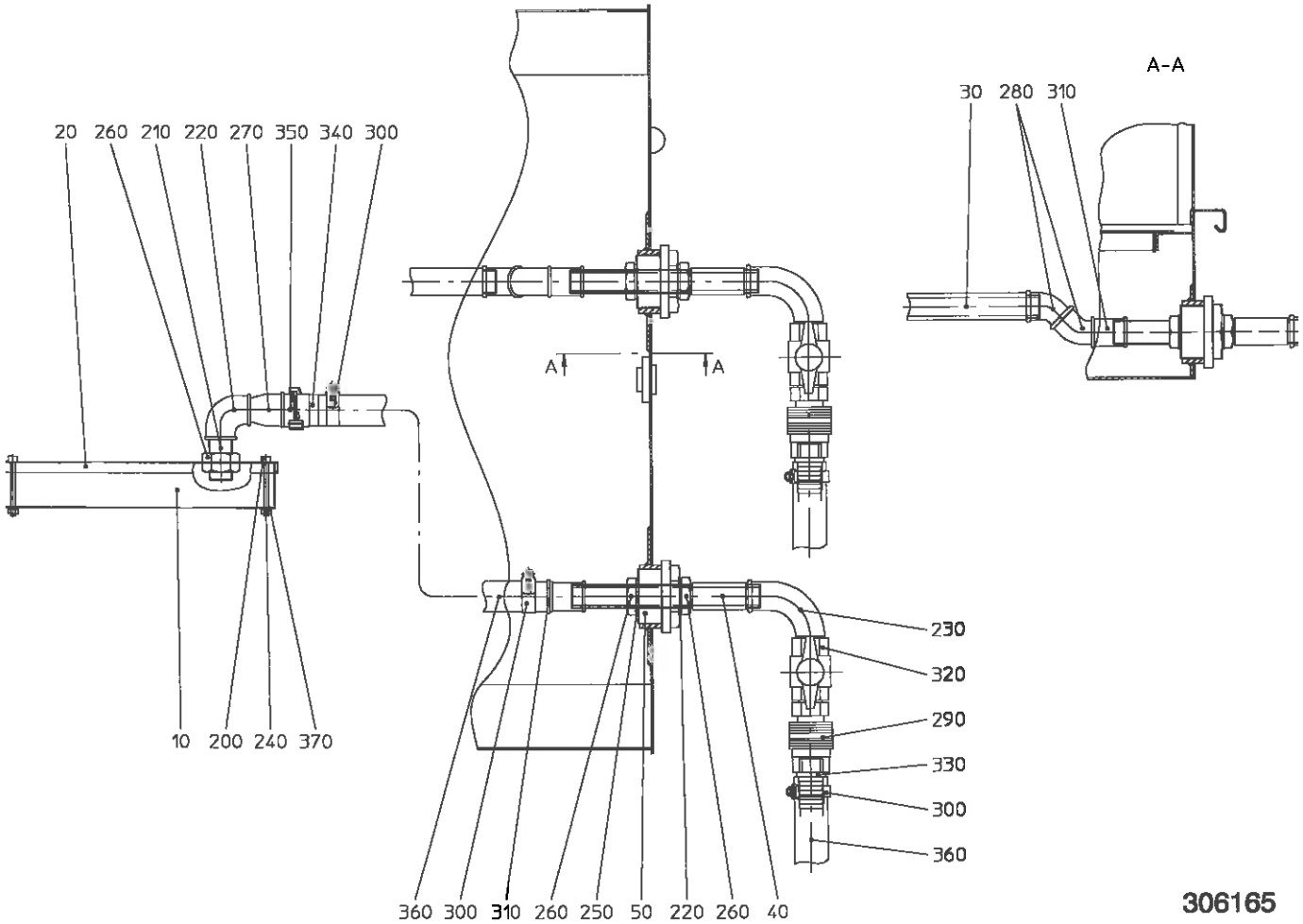

6.5.4 Diagrams and electric wiring

See diagram folder.

6.6 MIST AND SMOKE CONTROL

6.6.1 (306089) Filtermist Unit

Description

Extractor of oil and emulsion mist equipped with a filter for dry smoke.

The FILTERMIST is a centrifuge simple, designed and manufactured in a way which requires only minimal maintenance.

A smoke filter for dry smoke is used with cutting oils.
It is not necessary when using emulsion.

The unit is mounted on an adjustable bracket enabling easy installation and maintenance.

Components

10 Centrifuge for oil and emulsion mist

1010 Filter for dry smoke F14 – F34 (99.95%)

1020 Suction tube

1030 Oil return conduit

1040 Adjustable bracket

TECHNICAL DATA		
Flowrate	normal with filter	14 m^3/min. 11 m^3/min.
Motor		1,1 kW
Noise level	at 2 meters	69 dBA
Weight	Centrifuge	35 kg
Filtration mesh size	with smoke filter	100% from 0,8 to 5 mm 99,95% from 0,01 to1,3 mm

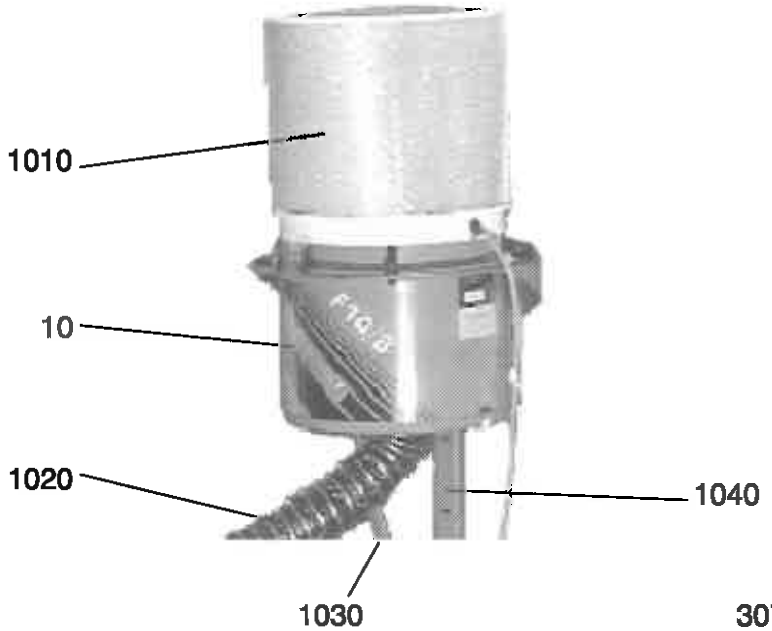

▲ **Caution !**
Even if a filter for dry smoke is installed, this may be insuffisant if heavy smoke is generated.
The user is absolutely obliged to read carefully and to follow strictly the prescriptions of the supplier (Filtermist).

Example not to follow...

No	Stock	Machining	Lubrication	Chosen solution
1	Inox	Turning Deep drilling	Oil / 120 bars	☛ Emulsion

⚠ **Caution !**

1. This filter must be connected so as to **operate in continuous duty** during the machine run.

2. Make sure that the connection makes the motor revolve in **the right sense**

3. Le carter, the drum and the vibration absorbing supports must be **verified every year.**

4. If the machine is mounted on a vibration absorbing support, make sure that **two retention belts are mounted** according to instructions.

5. Disconnect and **let the drum stop** before undoing the clamps of the lid.

MOUNTING

To start with : Having read the whole MANUAL OF INSTALLATION AND SERVICE of the supplier (Lestoprex)

What to do ?	Remarks
Premounting	
Mount the centrifuge on the adjustable bracket with...	....4 screws M10 x 30 + washers + nuts
Connect the motor electrically	Make sure that the connection makes the centrifuge revolve in the right sense. Do not forget the partition passage of the smoke filter
Mount the smoke filter on the centrifuge	Replace 2 plastic screws by clips.
Present the unit near the machine.	
Set the height of the bracket	The suction tube (spiral) must not have a gradient inferior to 3 %.
Connect the tube of oil return on the centrifuge	Tube + ring

MOUNTING (on the machine)	
What to do ?	**Remarks**
Dismount the fan located above the cross backwork operations and replace it by a suction endpiece with sieve	
Realize a hole of diameter 105 mm in the upper right part of the machine enclosure, then realize a partition passage by means of two suction endpieces with sieve	
Connect the endpieces to the centrifuge	Helicoidal suction tubes to be cut to length + flanges ∅ 100 mm.

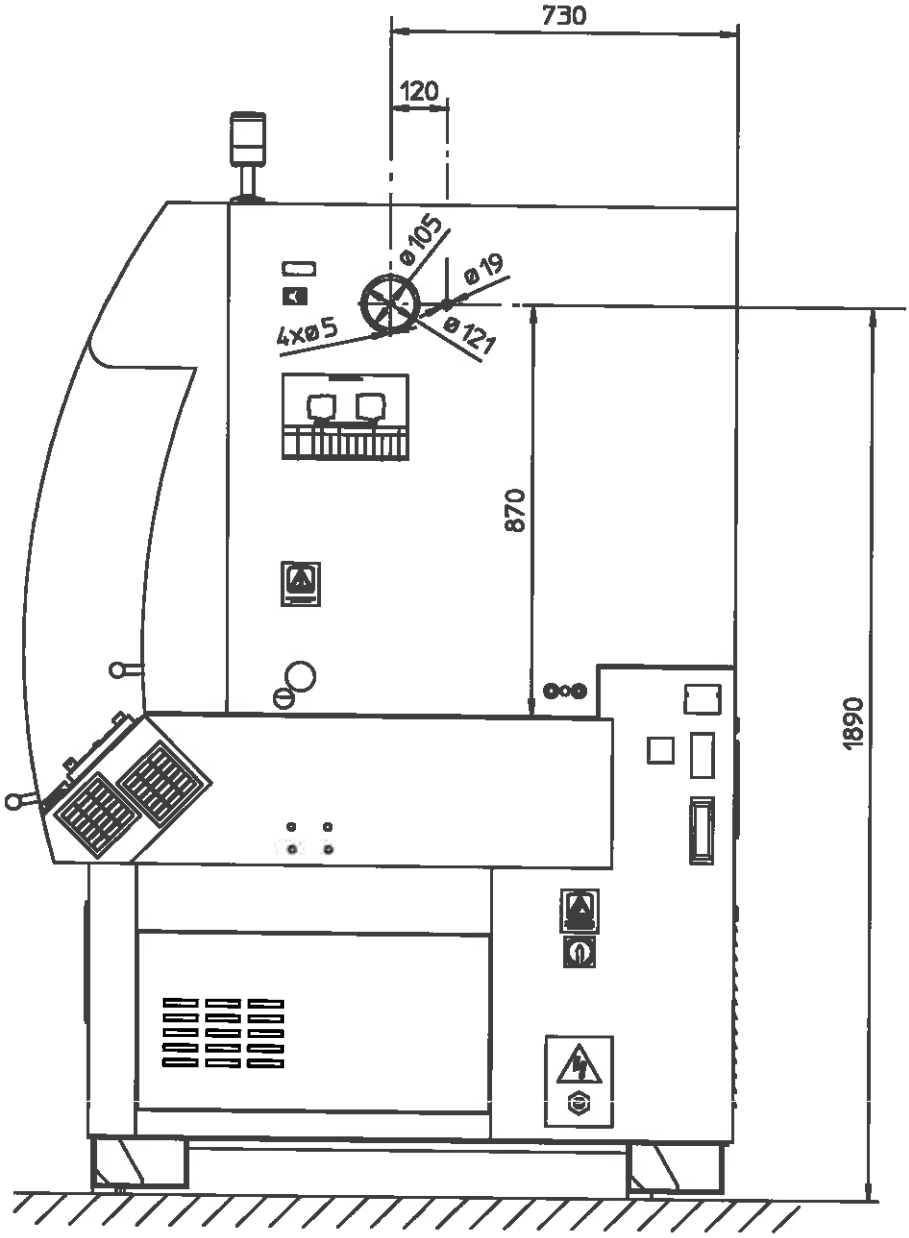

306089

MAINTENANCE

Interval : Yearly but at least every 3000 hours

To start with : MANUAL OF INSTALLATION AND OPERATION of the supplier (Lestoprex) at disposal.

⚠ Warning ! Main switch locked

What to do ?	Remarks
Replace the vibration absorbing support as well as the belts of torque limitation	
Replace the foam silencer on the exit side	
Dismount the inner drum and clean it thoroughly...	...make sure it is not damaged
Replace the foam filter cartridges	
Replace the filter for dry smoke	

What to do in case of problems.....

☐ **Note :**
Even if the yearly maintenance is effected, certain circumstances require a cleaning more frequent.
This is generally indicated when the flowrate drops or with excessive vibrations, particularly at the commissioning of the attachment.

All spare parts can be ordered direct with

LESTOPREX AG
CH - 8640 Rapperswil SG
++41+ 55 210 41 41

SPARE PARTS

Designation	Nbr
Filter for dry smoke F14 - F34 (99,95%) Lestoprex No. 10-60151	1
Vibration absorbing set for F14 - F34 (4 parts) Lestoprex No. 10-60841	1
Output filter for F14 - F34 Lestoprex No. 10-60817	1
Set of filters for F14/21 (4 parts) Lestoprex No. 10-60812	1

7. CUSTOMER-INTERFACE OPTIONS

- On Machines: 199223 & 199225

DECO 20&26

GENERAL

Over Optional Sockets and Part Program, the user may operate functions other than M-functions, such as :

- ◇ Valves (e.g. for an actuator)
- ◇ Message display
- ◇ Machine stop following an alarm
- ◇ Program selection following an event

- Number of Optional Sockets on the machine : 2

OPTION SOCKET INPUTS

- Number of inputs per socket : 2
- Application : for sensors, pressostats, pushbuttons, etc. which connect to :
  Terminal Box XT 800 in the back of the machine.

- **Optional Socket Input Wiring :**

Optional Socket 1 :	Input 1 is Terminal 891 on Terminal Box XT 800.
	Input 2 is Terminal 892 on Terminal Box XT 800.
Optional Socket 2 :	Input 1 is Terminal 893 on Terminal Box XT 800.
	Input 2 is Terminal 894 on Terminal Box XT 800.

OPTION SOCKET OUTPUTS

- Number of outputs per socket : 2
- Application : Activation of relays, contactors, electro-valves, electro-magnets, etc. which connect to :
  Terminal Box XT 800 in the back of the machine.

- Output voltage, max.: 60 V DC
- Output current, max.: 1.5 A DC

- **Optional Socket Output Wiring :**

Optional Socket 1 :	Output 1 is Terminal 814 on Terminal Box XT 800.
	Output 2 is Terminal 824 on Terminal Box XT 800.
Optional Socket 2 :	Output 1 is Terminal 834 on Terminal Box XT 800.
	Output 2 is Terminal 844 on Terminal Box XT 800.

TORNOS BECHLER

MACHINE: rear view

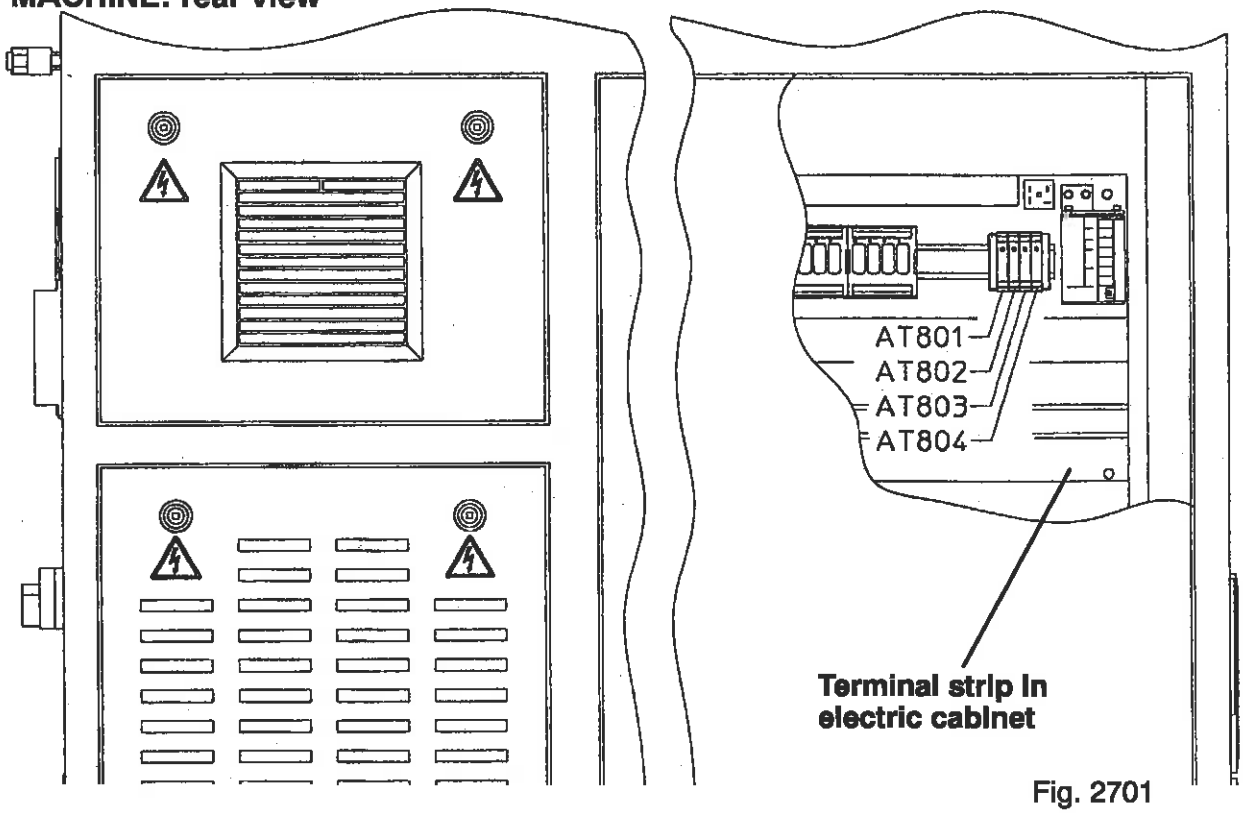

Fig. 2701

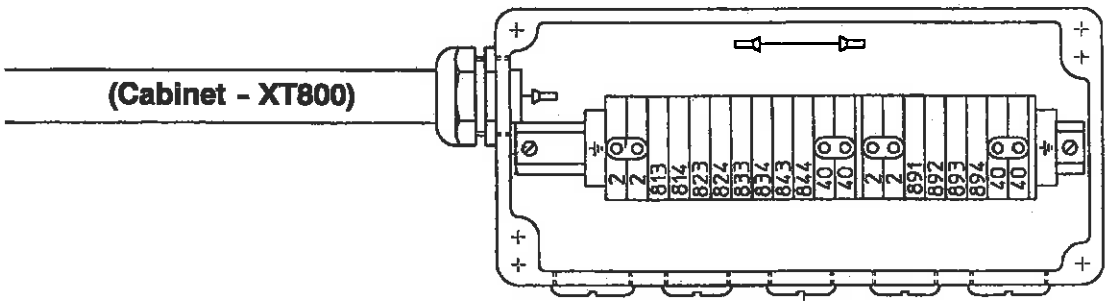

Terminal Box XT 800

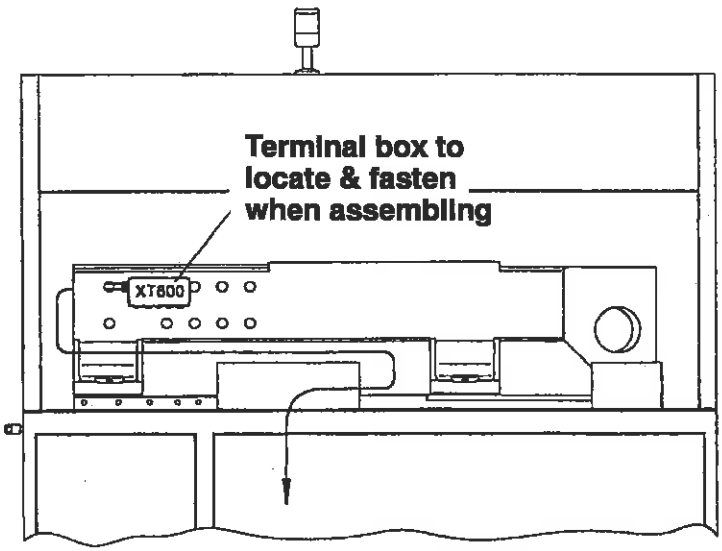

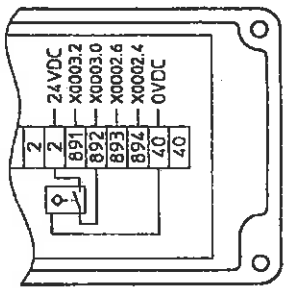

Box cover

Fig. 2702

PROGRAMMING OPTIONAL SOCKET 1

Configurating Optional Socket 1

The first thing to do is to configurate Optional Socket 1 over Part Program and preferably outside the Main Program loop.

DO SIGNALS FOR CONFIGURATING OPTION SOCKET 1

DO 1750=1 : reverses Input 1 and enables Input 1 signal at 0.
Programming: M800 P1=1750

DO 1751=1 : reverses Input 2 and enables Input 2 signal at 0.
Programming: M800 P1=1751

DO 1752=1 : disables Input 1 and Input 1 signal is not used.
Programming: M800 P1=1752

DO 1753=1 : disables Input 2 and Input 2 signal is not used.
Programming: M800 P1=1753

DO 1755=1 : enables display of Message 2011: MESSAGE ON OPTION SOCKET.
A message does not affect the Part Program run.
Programming: M800 P1=1755

When you configurate the socket to enable the message: 2011: MESSAGE ON OPTIONAL SOCKET, this can entail stopping and restarting the program run automatically :

Option : K 23.0 = 1

Now the appearance of 2011 MESSAGE ON OPTIONAL SOCKET 1 stops the part program, its disappearance restarts the part program.

DO 1756=1 : enables display of Alarm 2012: ALARM CLASS 1 OPTION SOCKET.
An Alarm Class 1 stops the program at the end of table.
Programming: M800 P1=1756

DO 1757=1 : enables display of Alarm 1013: ALARM CLASS 3 OPTION SOCKET.
An Alarm Class 3 stops the program by enforcing axes feedhold, turns off the coolant, the chip conveyor and the spindles.
Programming: M800 P1=1757

DO 1760=1 : selects a new program (table).
Programming: M800 P1=1760

ENABLE INPUT CHECK-FUNCTION INSIDE PROGRAM LOOP

M815 enables check start,
generates 100 ms impulse to enable
check function of inputs on Socket 1.

☐ **Note :** Alarms Class 1 and 3 change over to Alarms Class 4 after 10 minutes and cut off the power to the machine.

ENABLE / DISABLE OUTPUTS ON OPTIONAL SOCKET 1

M811 :	enables Output 1.
M812 :	disables Output 1.
DO 1761=1 :	disables Output 1 over RESET key. Programming: M800 P1=1761
DO 1765=1 :	disables Output 1. Programming: M800 P1=1765
M813 :	enables Output 2.
M814 :	disables Output 2.
DO 1762=1 :	disables Output 2 over RESET key. Programming: M800 P1=1762
DO 1766=1 :	disables Output 2. Programming: M800 P1=1766

PROGRAMMING OPTIONAL SOCKET 2

Configurating Optional Socket 2

The first thing to do is to configurate Optional Socket 2 over Part Program and preferably outside the Main Program loop.

DO SIGNALS FOR CONFIGURATING OPTION SOCKET 2

DO 1770=1 :	reverses Input 1 and enables Input 1 signal at 0. Programming: M800 P1=1770
DO 1771=1 :	reverses Input 2 and enables Input 2 signal at 0. Programming: M800 P1=1771
DO 1772=1 :	disables Input 1 and Input 1 signal is not used. Programming: M800 P1=1772
DO 1773=1 :	disables Input 2 and Input 2 signal is not used. Programming: M800 P1=1773
DO 1775=1 :	enables display of Message 2011: MESSAGE ON OPTION SOCKET. A message does not affect the Part Program run. Programming: M800 P1=1775

When you configurate the socket to enable the message: 2011: MESSAGE ON OPTIONAL SOCKET, this can entail stopping and restarting the program run automatically :

Option : K 23.1 = 1

Now the appearance of 2011 MESSAGE ON OPTIONAL SOCKET 2 stops the part program, its disappearance restarts the part program.

DO 1776=1 : enables display of Alarm 2012: ALARM CLASS 1 OPTION SOCKET. An Alarm Class 1 stops the program at the end of table.
Programming: M800 P1=1776

DO 1777=1 : enables display of Alarm 1013: ALARM CLASS 3 OPTION SOCKET. An Alarm Class 3 stops the program by enforcing axes feeds at 0, turns off the coolant, the chip conveyor and the spindles.
Programming: M800 P1=1777

DO 1780=1 : selects a new program (table).
Programming: M800 P1=1780

ENABLE INPUT CHECK-FUNCTION INSIDE PROGRAM LOOP

M825 : enables check start,
generates 100 ms impulse to enable
check function of inputs on Socket 2.

☐ **Note :** Alarms Class 1 and 3 change over to Alarms Class 4 after 10 minutes and cut off the power to the machine.

ENABLE / DISABLE OUTPUTS ON OPTIONAL SOCKET 2

M821 : enables Output 1.

M822 : disables Output 1.

DO 1781=1 : disables Output 1 over RESET key.
Programming: M800 P1=1781

DO 1785=1 : disables Output 1.
Programming: M800 P1=1785

M823 : enables Output 2.

M824 : disables Output 2.

DO 1782=1 : disables Output 2 over RESET key.
Programming: M800 P1=1782

DO 1786=1 : disables Output 2.
Programming: M800 P1=1786

TORNOS BECHLER

KIENZLE Productivity-Monitor Control
(an example)

WIRING DIAGRAM FOR OPTIONAL SOCKET 1

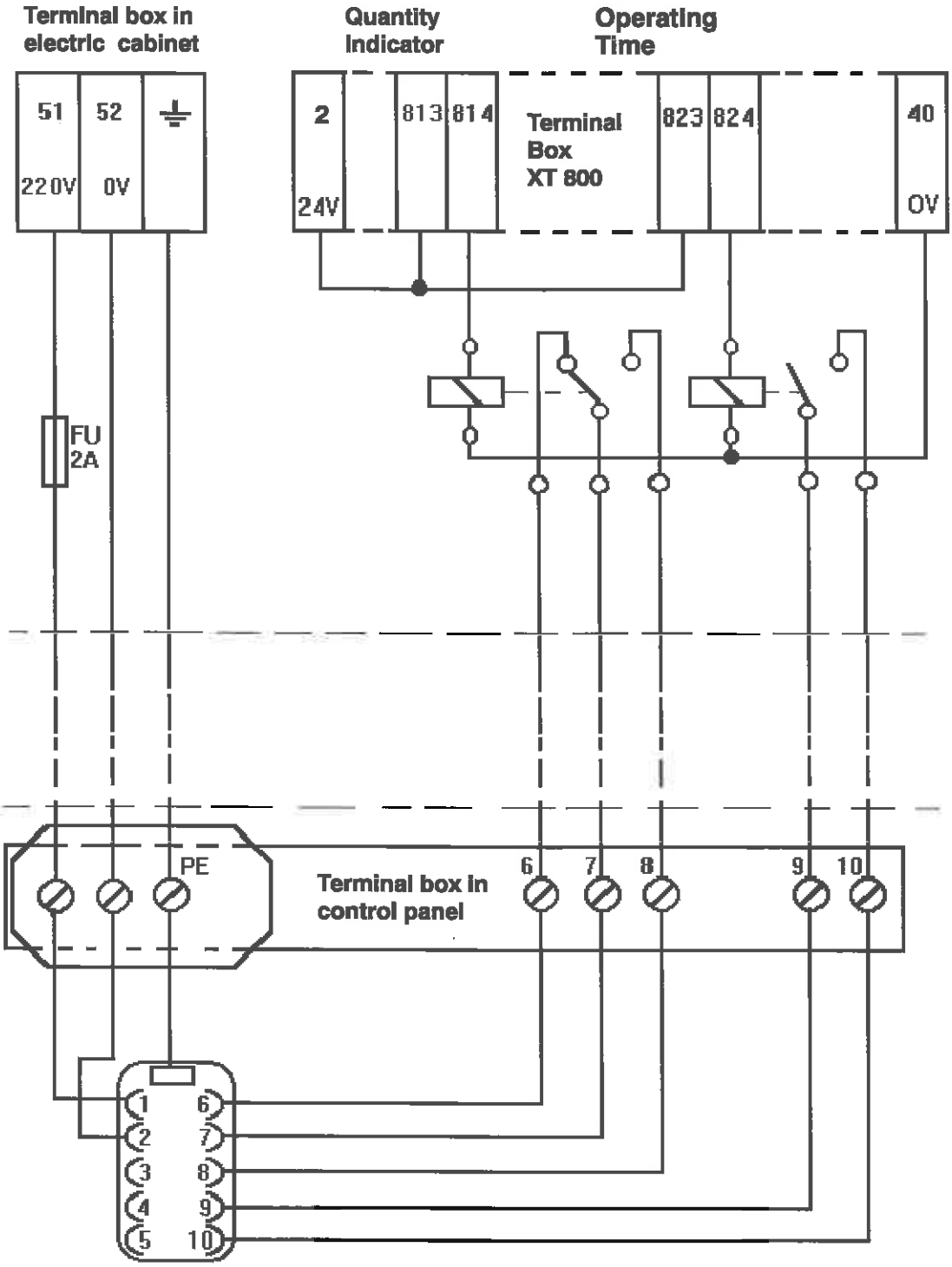

ENABLE OUTPUTS INSIDE PROGRAM LOOP

M813 : enables Operating Time Output.
(to be put at program loop start),
enables Output 2 on Optional Socket 1.

M811 D811=1000: enables Quantity Indicator Output.
(Command response time: 1 sec),
enables Output 1 on Optional Socket 1.

M812 : disables Quantity Indicator Output.
disables Output 1 on Optional Socket 1.

M20 : End-of-part signal.

M814 : disables Operating Time.
(to be put at program loop end),
disables Output 2 on Optional Socket 1.

Sensor Control Operation (an example)

WIRING DIAGRAM FOR OPTIONAL SOCKET 2

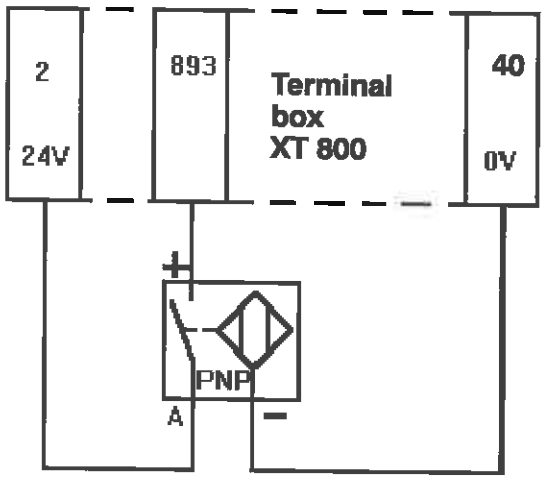

When Input 1 of the optional socket goes over to 1 (24V), the program stops at the end of table (Alarm Class 1)

CONFIGURATING OPTIONAL SOCKET 2 OUTSIDE PROGRAM LOOP

M800 P1=1773 P2=1776 : 1773 disables unused Input 2.
1776 selects Alarm Class 1.

ENABLE CHECK BY INPUT 1 INSIDE PROGRAM LOOP

M825 : enables check start,
generates 100 ms impulse to enable checking Input 1 on Socket 2.

If Input 1 on Socket 2 is at 1 and M825 enabled, Alarm 2012: ALARM CLASS 1 OPTION SOCKET is displayed and the program stops at the end of table.

Drill Sensor Control (an example)

- Drill sensor activated by pneumatic piston.
- Sensor signal is wired to Input 1 on **Optional Socket 1**.
- Pneumatic valve is wired to Output 1 on **Optional Socket 1**.

WIRING DIAGRAM FOR OPTIONAL SOCKET 1

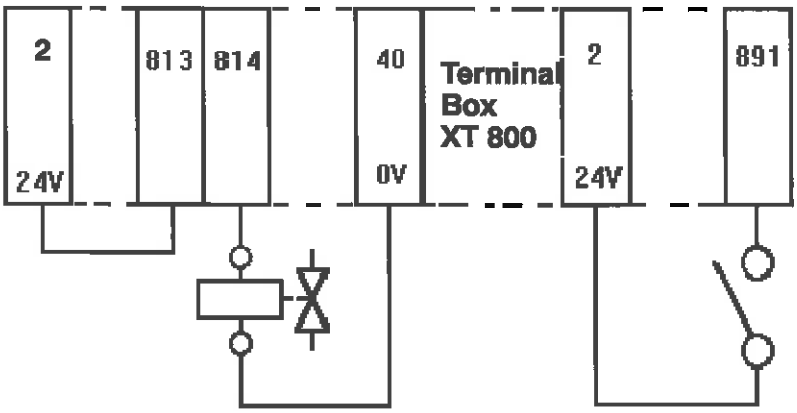

CONFIGURATING OPTIONAL SOCKET 1 OUTSIDE PROGRAM LOOP

In tool absence : the program stops at the end of table (Alarm Class 1).

M800 P1=1750 P2=1753 P3=1756 : 1750 reverses Input 1.
1753 disables unused Input 2.
1756 selects Alarm Class 1.

In tool presence : the program stops instantaneously (Alarm Class 3).

M800 P1=1753 P2=1757 : 1753 disables unused Input 2.
1757 selects Alarm Class 3.

ENABLE CHECK INSIDE PROGRAM LOOP

M815 : enables check start.

M811 D811=300 : Sensing command response time: 300 ms

M812 : disables sensing command.

In tool absence (input is 0 and M815 enabled) :
Alarm 2012: ALARM CLASS 1 OPTION SOCKET is displayed and the program stops at the end of table.

In tool presence (input is 1 and M815 enabled) :
Alarm 1013: ALARM CLASS 3 OPTION SOCKET is displayed and the program stops at the end of table.

TIMING DIAGRAM FOR DRILL CHECK SENSOR

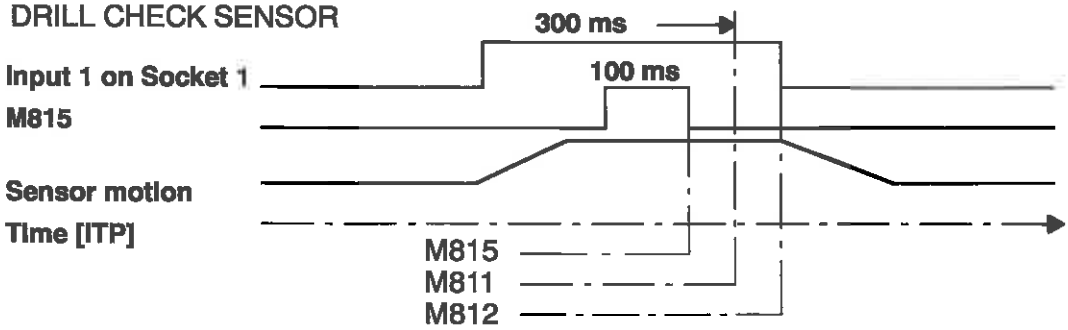

Oil Level Check (an example)

When level signal arrives at 0, a message is displayed on the NC screen.

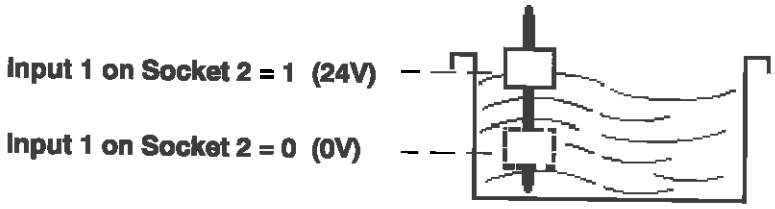

WIRING DIAGRAM FOR OPTIONAL SOCKET 2

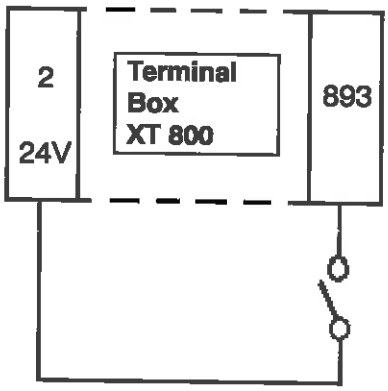

CONFIGURATING OPTIONAL SOCKET 2 OUTSIDE PROGRAM LOOP

M800 P1=1770 P2=1773 P3=1775 :

1770 reverses Input 1 signal (enabled at 0).

1773 disables unused Input 2.

1775 selects a message.

ENABLE CHECK BY INPUT 1 INSIDE PROGRAM LOOP

M825 : enables check start,
generates 100 ms impulse to enable checking Inputs 1 and 2 on Socket 2.

If Input 1 on Socket 2 is 0 and M825 enabled, Alarm 2011: MESSAGE ON OPTION SOCKET is displayed.

The operator must assume that the oil tank is empty.

Single-Acting Piston Control Monitored by Two Sensors (an example)

Assumptions :

- Piston with advance control.
- Sensor for piston in forward position.
- Sensor for piston in backward position.

The following requirements to be met :

- Piston-forward sensing to be 1 before piston return.
  If not, the program stops instantaneously by selecting an Alarm Class 3.
- Piston-backward sensing to be 1 before machining is continued.
  If not, the program stops instantaneously by selecting an Alarm Class 3.

WIRING DIAGRAMS FOR

PISTON-FORWARD SENSOR,
INPUT I on OPTIONAL SOCKET 1

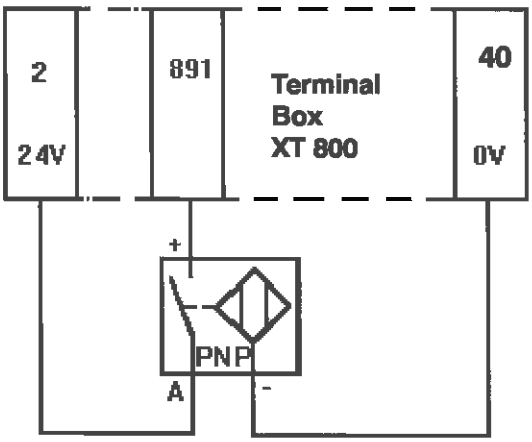

PISTON-BACKWARD SENSOR,
INPUT I on OPTIONAL SOCKET 2

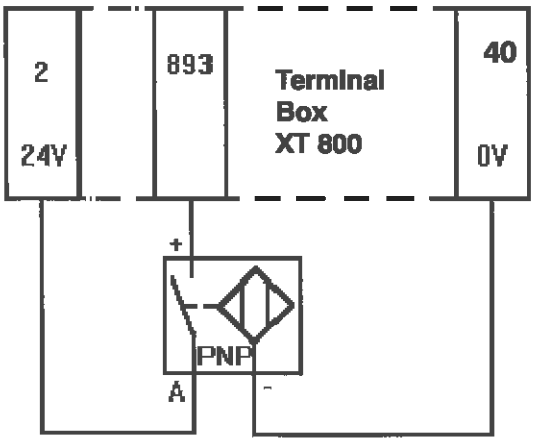

PISTON-ADVANCE ELECTRO-VALVE

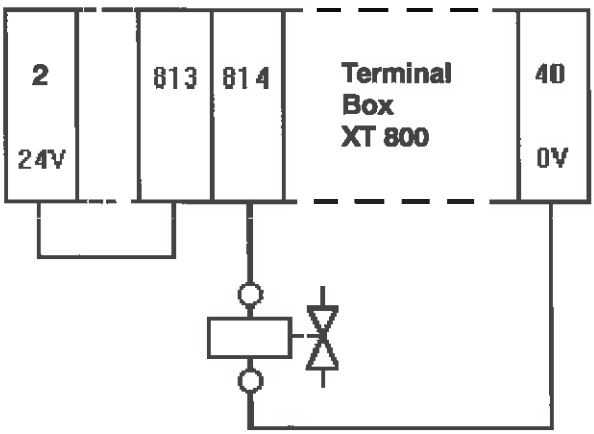

CONFIGURATING OPTIONAL SOCKET 1 OUTSIDE PROGRAM LOOP

M800 P1=1750 P2=1753 P3=1757 : 1750 reverses input signal (enabled at 0).
1753 disables unused Input 2.
1757 selects an Alarm Class 3.

CONFIGURATING OPTIONAL SOCKET 2 OUTSIDE PROGRAM LOOP

M800 P1=1770 P2=1773 P3=1777 : 1770 reverses input signal (enabled at 0).
1773 disables unused Input 2.
1777 selects an Alarm Class 3.

ENABLE SENSOR CHECK INSIDE PROGRAM LOOP

M815 :	enables check start by piston-forward input.
M811 D811=1000 :	enables piston advance control.
M812 :	disables piston advance control (piston return).
G04 X2 :	2 s dwell (acc. to the time necessary for piston to return)
M825 :	enables check start by piston-backward input.

If Input 1 on Socket 1 is 0 and M815 enabled,
Alarm 1013: ALARM CLASS 3 OPTION SOCKET is displayed
and the operator must assume that the piston advance has not been properly completed.

If Input 1 on Socket 2 is 0 and M825 enabled,
Alarm 1013: ALARM CLASS 3 OPTION SOCKET is displayed
and the operator must assume that the piston return has not been properly completed.

PISTON CHECK TIMING DIAGRAM

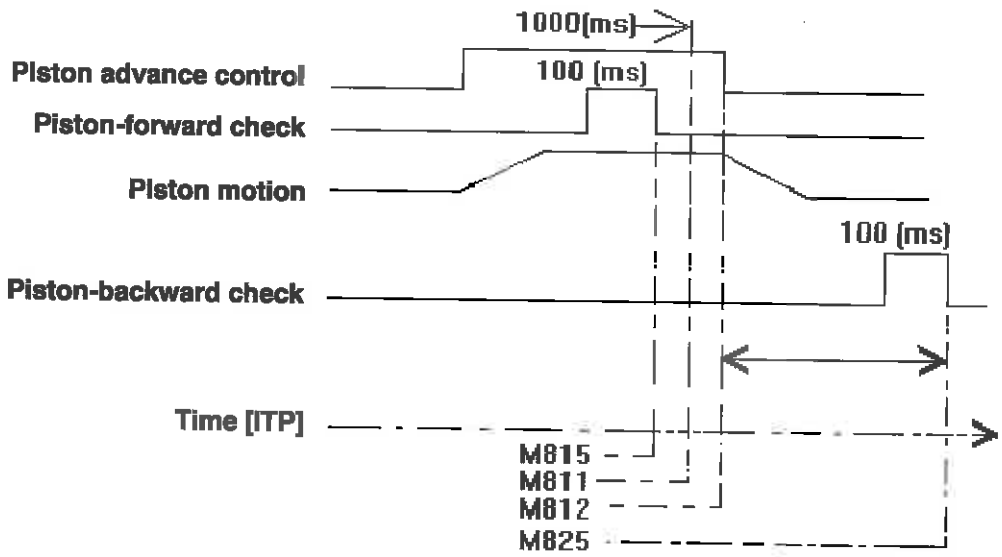

Double-Acting Piston Control Monitored by Two Sensors (an example)

Assumptions :

- Piston with advance / return control.
- Sensor for piston in forward position.
- Sensor for piston in backward position.

The following requirements to be met :

- Piston-forward sensing to be 1 before piston return.
  If not, the program stops instantaneously by selecting an Alarm Class 3.
- Piston-backward sensing to be 1 before machining is continued.
  If not, the program stops instantaneously by selecting an Alarm Class 3.

WIRING DIAGRAMS FOR

PISTON-FORWARD SENSOR,
INPUT I on OPTIONAL SOCKET 1

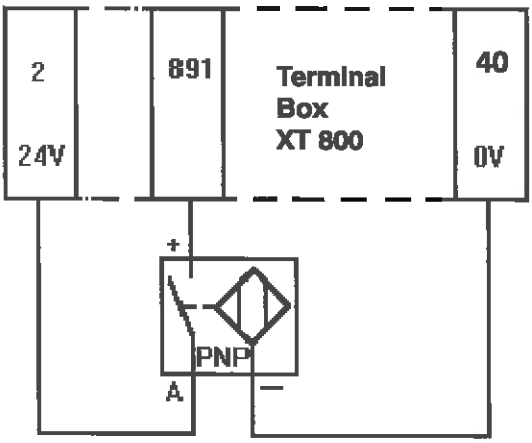

PISTON-BACKWARD SENSOR,
INPUT I on OPTIONAL SOCKET 2

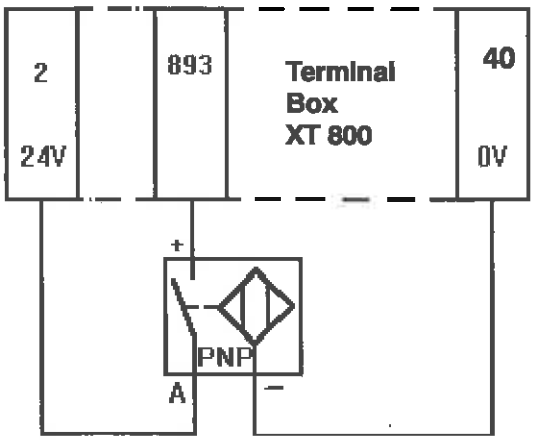

PISTON-ADVANCE
ELECTRO-VALVE

PISTON-RETURN
ELECTRO-VALVE

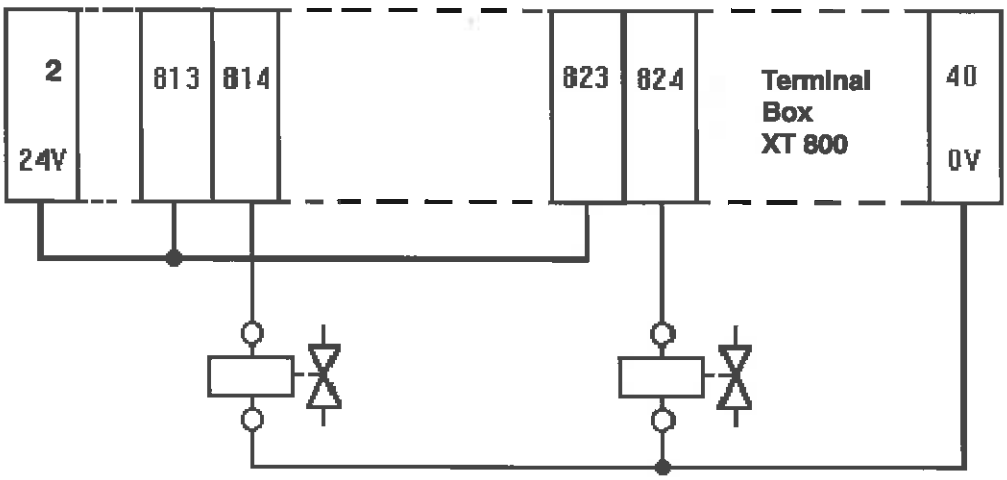

CONFIGURATING OPTIONAL SOCKET 1 OUTSIDE PROGRAM LOOP

M800 P1=1750 P2=1753 P3=1757 :

1750 reverses input signal (enabled at 0).
1753 disables unused Input 2.
1757 selects an Alarm Class 3.

CONFIGURATING OPTIONAL SOCKET 2 OUTSIDE PROGRAM LOOP

M800 P1=1770 P2=1773 P3=1777 :

1770 reverses input signal (enabled at 0).
1773 disables unused Input 2.
1777 selects an Alarm Class 3.

ENABLE SENSOR CHECK INSIDE PROGRAM LOOP

M811 D811=16 :	enables piston advance control.	
M812 :	disables piston advance control.	
G04 X2 :	2 s dwell	(acc. to the time necessary for piston to reach the piston-forward sensor)
M815 :	enables check start by piston-forward input.	
M813 D813=16 :	enables piston return control.	
M814	disables piston return control.	
G04 X2 :	2 s dwell	(acc. to the time necessary for piston to reach the piston-backward sensor)
M825 :	enables check start by piston-backward input.	

If Input 1 on Socket 1 is 0 and M815 enabled,
Alarm 1013: ALARM CLASS 3 OPTION SOCKET is displayed
and the operator must assume that the piston advance has not been properly completed.

If Input 1 on Socket 2 is 0 and M825 enabled,
Alarm 1013: ALARM CLASS 3 OPTION SOCKET is displayed
and the operator must assume that the piston return has not been properly completed.

PISTON CHECK TIMING DIAGRAM

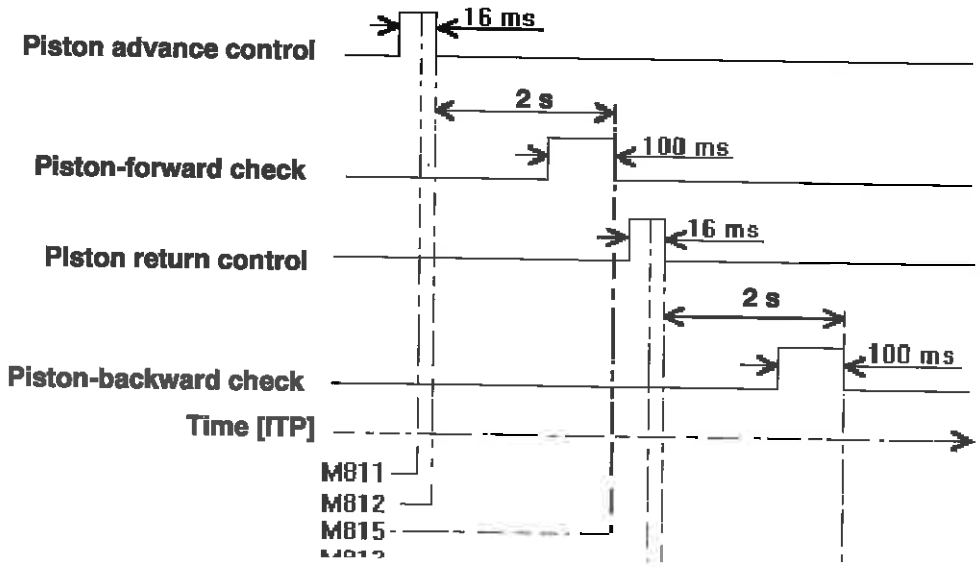

OPTIONAL SOCKET DIAGRAM WITH DO ALLOCATION

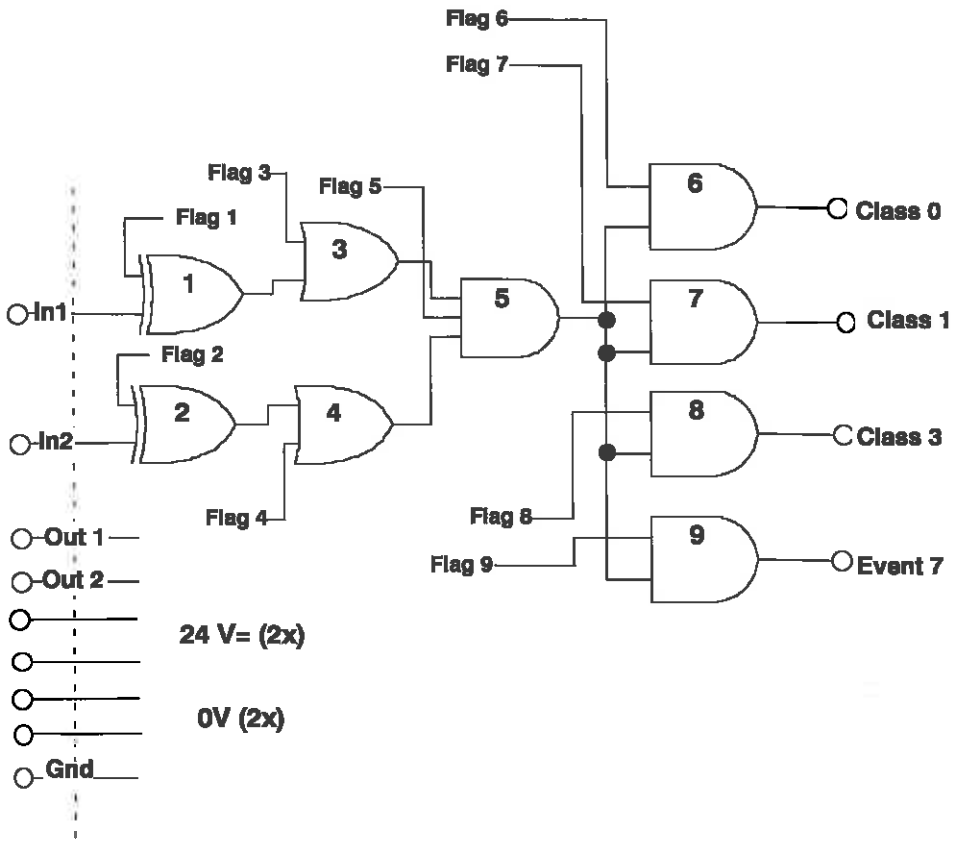

- Flags 1 and 2 : reverse Inputs **In1** and **In2**.
- Flags 3 and 4 : disable Inputs **In1** and/or **In2**.
  Flag indication 1 disables the input.
- Flag 5 : determines when check starts (ck).
- Flags 6 to 8 : determine actions to be enabled.
  Gates 6, 7, 8, 9 are actually flip-flops to be reinitialized by PMC when program starts.
- Flag 9 : enables Register **Event 7**.
  (cf. the concept of sequences)

Recap of Logical Functions								
XOR (Gates 1 and 2)			**OR** (Gates 3 and 4)			**AND** (Gates 5 to 9)		
A	B	OUT	A	B	OUT	A	B	OUT
0	0	0	0	0	0	0	0	0
0	1	1	0	1	1	0	1	0
1	0	1	1	0	1	1	0	0
1	1	0	1	1	1	1	1	1

OPTIONAL SOCKET CONFIGURATION FLAGS		
Flags	**Socket 1**	**Socket 2**
1	1750	1770
2	1751	1771
3	1752	1772
4	1753	1773
5	1754	1774
6	1755	1775
7	1756	1776
8	1757	1777
9	1760	1780

ENABLE / DISABLE FLAGS FOR OPTIONAL SOCKET OUTPUTS		
Flags	**Socket 1**	**Socket 2**
Set OUT 1	1763	1783
	-1765	-1785
Set OUT 2	1764	1784
	-1766	-1786
Reset OUT 1	1765	1785
	-1763	-1783
Reset OUT 2	1766	1786
	-1764	-1784
RR1	1761	1781
RR2	1762	1782
RR1 *and* **RR2** *enable resets of Output 1 and 2 respectively for machine program reset.*		

8. INDEX

8.1 MACHINE ELEMENTS

(216174) mini-sensor, Chap. 6.2 /10
(305091) Mini-Sensor Pneumatics, Chap. 6.2.1 /12
(306011) s3-spindle drive, Chap. 4.4 /9
(306027) Guidebush Drive For DECO 20, Chap. 1.4.2 /13
(306031) Variable Chucking Force System, Chap. 2.3.1 /9
(306033) Left / Right Toolholder, Chap. 3.1.2 /1
(306036) S5-Spindle Cross Drive, Chap. 5.7.1 /15
(306038) Drilling Spindle For ESX 25-Collet, Chap. 3.3.1 /8
(306039) 20mm-ID Toolholder, Chap. 4.2 /5
(306040) 25mm-ID Toolholder, Chap. 4.3 /8
(306041) 15-bar pump, Chap. 6.3 /15
(306042) F20-Collet Sleeve For DECO 20, Chap. 2.2.1 /3
(306057) guidebush coolant system, Chap. 1.2 /4
(306061) High Toolholder, Chap. 3.1.2 /1
(306063) Mini-Sensor Fittings, Chap. 6.2.2 /14
(306064) Lightweight Spring For DECO 20, Chap. 2.1 /1
(306066) 30mm-ID Toolholder, Chap. 3.7.1 /27
(306066) 30mm-ID Toolholder, see Para. 3.7.1, Chap. 3.8.2 /33
(306067) 2x16mm-ID Knee-Toolholder, Chap. 3.2.1 /2
(306068) 25mm-ID Knee-Toolholder, Chap. 3.2.2 /5
(306070) HF Drilling Spindle, Chap. 3.7.2 /29
(306071) Polygoning Unit, Chap. 3.4.1 /14
(306072) Long-Part Ejector For DECO 20, Chap. 5.8.1 /24
(306073) Long-Part Catcher, Chap. 5.8.3 /30
(306074) Long-Part Catcher Stand, Chap. 5.8.4 /34
(306076) Long-Part Disposal Pneumatics, Chap. 5.8.5 /40
(306077) F30-Collet Sleeve For DECO 20, Chap. 2.2.2 /5
(306078) Live 25.4mm Guidebush, Chap. 1.3.1 /6
(306080) HF Slotting Spindle, Chap. 3.8.3 /34
(306081) differential threading spindle, Chap. 4.1 /1
(306083) Generating Milling Unit, Chap. 3.5.1 /18
(306084) Bar Retention Claws, Chap. 3.9.1 /38
(306086) 63mm-OD Milling Spindle For ESX 25-Collet, Chap. 3.3.2 /11
(306087) HF Generator Enclosure, Chap. 3.7.3 /32
(306087) HF Generator Enclosure, see Para. 3.7.3, Chap. 3.8.2 /33

(306088) Orientation Device For HF Slotting Spindle, Chap. 3.8.4 /37
(306089) Filtermist Unit, Chap. 6.6.1 /31
(306095) F37-Collet Sleeve For DECO 26 Main Spindle, Chap. 2.2.5 /8
(306096) long drilling spindle for esx 25-collet, Chap. 4.5 /14
(306099) S5-Spindle Axial Drive, Chap. 5.7.2 /19
(306100) deep drilling unit, Chap. 6.1 /1
(306101) Thread Whirling, Chap. 3.6.1 /22
(306104) F30-Collet Sleeve For DECO 26 Main Spindle, Chap. 2.2.4 /7
(306112) Live 32mm Guidebush, Chap. 1.3.2 /9
(306113) Guidebush Drive For DECO 26, Chap. 1.4.2 /13
(306118) chip conveyor, Chap. 6.4 /19
(306119) F25-Collet Sleeve For DECO 26 Main Spindle, Chap. 2.2.3 /6
(306120) Long-Part Equipment For DECO 20, Chap. 5.8.7 /41
(306122) Positioned-Spindle Locking System, Chap. 2.4.1 /11
(306125) Positioned-Spindle Locking Pneumatics, Chap. 2.4.2 /17
(306127) F37-Collet Sleeve For DECO 26 Pickoff Spindle, Chap. 5.1.3 /1
(306134) F25-Collet Sleeve For DECO 26 Pickoff Spindle, Chap. 5.1.3 /1
(306135) F30-Collet Sleeve For DECO 26 Pickoff Spindle, Chap. 5.1.3 /1
(306136) Long-Part Equipment For DECO 26, Chap. 5.8.7 /41
(306138) Long-Part Ejector For DECO 26, Chap. 5.8.2 /28
(306151) Ejector with Spring, Chap. 5.2.1 /2
(306152) Pickoff Spindle Collet Cleaning, Chap. 5.3.1 /5
(306153) Flushing Pneumatics, Chap. 5.4.1 /7
(306154) Ejector with Spring, Chap. 5.5.1 /9
(306155) Pickoff Spindle Collet Flushing, Chap. 5.6.1 /13
(595798) HABEGGER Guidebush, Chap. 1.1.1 /1

3.2 SPARE PARTS

020175, Chap. 1.3.1 /8
020198, Cylindrical hex. head screw M6 x 16, Chap. 1.3.2 /12
200277, Collet spring, Chap. 2.2.5 /8
201250, Grooved ball bearing 6203-2RZ, Chap. 5.7.2 /23
203753, Grooved ball bearing 6003-2Z, Chap. 3.4.1 /14
204917, Needle bush HK 1010, Chap. 3.4.1 /14
208584, Air-Flow Regulator Festo GR-1/8, Chap. 2.4.2 /17
209572, Angular contact bearing 7202- C - A - L - U, Chap. 1.4.2 /16
209697, Needle cage K 12x16x13 TN 0/-2, Chap. 3.5.1 /21
212095, Circuit selector, Chap. 6.3 /18

212371, Collet spring, Chap. 2.2.3 /6

212372, Collet spring, Chap. 2.2.2 /5, Chap. 2.2.4 /7

212394, Grooved ball bearing 6003-2RZ, Chap. 3.5.1 /21, Chap. 3.6.1 /26

214897, O-Ring Viton 37.77x2.62, Chap. 3.5.1 /21, Chap. 3.6.1 /26

215014, Needle bush BK 1210, Chap. 3.6.1 /26

215356, Filter " HC 6 mic 10" 750.127.3, Chap. 1.2 /5

215499, Chap. 2.2.1 /4

215818, O-ring 26.70 x 1.78, Chap. 2.4.1 /13

215990, Filter cartridge 25 micron, Chap. 6.1 /9

216156, Grooved ball bearing SKF 6002 - 2RZ, Chap. 1.4.2 /16

216252, Gear pump + motor 350FB/M1,5 SGN, Chap. 6.3 /18

216431, Belt Syncroflex 16/T5/305, Chap. 3.6.1 /26

216509, Electrovalve 5/2 monostable 24 V BOSCH No. 0 820 038 052, Chap. 2.4.2 /17, Chap. 5.8.7 /41, Chap. 6.2.1 /13

216595, Pneumatic thrustor D25 M/46025/600, Chap. 5.8.1 /26

216698, Air-flow regulator Festo GRLA 1/8 QS 6, Chap. 2.4.2 /17, Chap. 6.2.1 /13

216711, Double-acting cylinder (ISO 6432) FESTO DSNU-25-50-PPV-A, Chap. 5.8.3 /32

216753, Clamping sleeve DKWN 12x22x13, Chap. 3.6.1 /26

216774, Ball bearing B.C.OBL 71908-C-A-32-2Q, Chap. 3.6.1 /26

216931, Belt Synchrof 16/T10/960, Chap. 1.4.2 /16

216941, Grooved ball bearing SKF 61911, Chap. 1.4.2 /16

216951, Syncroflex Belt 32/T5/1315, Chap. 4.4 /9, Chap. 5.7.1 /18

216954, Grooved ball bearing 6001-2RZ, Chap. 3.5.1 /21, Chap. 4.4 /9, Chap. 5.7.2 /23

217017, Air flow regulator FESTO GRLA-1/8-QS-4, Chap. 5.8.7 /41

217105, Angular contact bearing 7003-E-A-L-2Q, Chap. 3.4.1 /14, Chap. 3.5.1 /21, Chap. 3.6.1 /26

217109, Double-acting cylinder (ISO 6432) FESTO DSNU-25-500-PPV-A, Chap. 5.8.3 /32

217110, Closed-ring sleeve 20mm-j HYDREL PAB 2045 PP AS, Chap. 5.8.3 /32

217211, Synchroflex belt 25/T5/225, Chap. 3.4.1 /14

217217, Needle bush BK 1012, Chap. 3.5.1 /21

217232, Syncroflex Belt 32/T5/480, Chap. 5.7.2 /23

217233, Syncroflex Belt 32/T5/990, Chap. 5.7.2 /23

217234, Syncroflex Belt 32/T5/650, Chap. 5.7.2 /23

217273, Belt Synchrof SKF 61911, Chap. 1.4.2 /16

217321, O-ring 23.47 x 2.62, Chap. 2.4.1 /13

217341, Coupling Pump Item 200, Chap. 6.3 /18

217570, Distributor 5/2 monostable 24 V FESTO MN2H-5/2-D-02-FR, Chap. 5.4.1 /7

217604, Spring 16 daN, Chap. 5.5.1 /12

217624, Spring 6 daN, Chap. 5.5.1 /12

217688, Wedge-type valve BACHOFEN 15V 100020, Chap. 5.4.1 /7

217751, Oil cooler, Chap. 6.5/28

306057, Complete coolant system, Chap. 1.2 /5

463132, Strainer, Chap. 6.3 /18

477558, Setting Tool, Chap. 1.3.1 /6

481173, Flexible pipe 10 mm diam., 2830 mm long, Chap. 6.3 /18

562037, Chap. 2.2.1 /4

562038, Chap. 2.2.1 /4

562045, Chap. 1.3.1 /8

562057, Linear movement bearing, Chap. 1.4.2 /16

562316, Chap. 1.3.1 /8

562339, Nose nut, Chap. 2.2.3 /6, Chap. 2.2.5 /8

562340, Collet sleeve, Chap. 2.2.5 /8

562463, Nose nut, Chap. 2.2.4 /7

562464, Collet sleeve, Chap. 2.2.4 /7

562495, Tie, Chap. 1.3.2 /12

562505, Collet sleeve, Chap. 2.2.3 /6

562516, Setting Tool, Chap. 1.3.2 /9

562528, Nose nut, Chap. 2.2.2 /5

562529, Collet sleeve, Chap. 2.2.2 /5

562722, Endpiece diameter 12 mm, Chap. 5.5.1 /11

562733, Endpiece diameter 30 mm, Chap. 5.5.1 /11

562757, Endpiece diameter 10 mm, Chap. 5.2.1 /4

562758, Endpiece diameter 20 mm, Chap. 5.2.1 /4